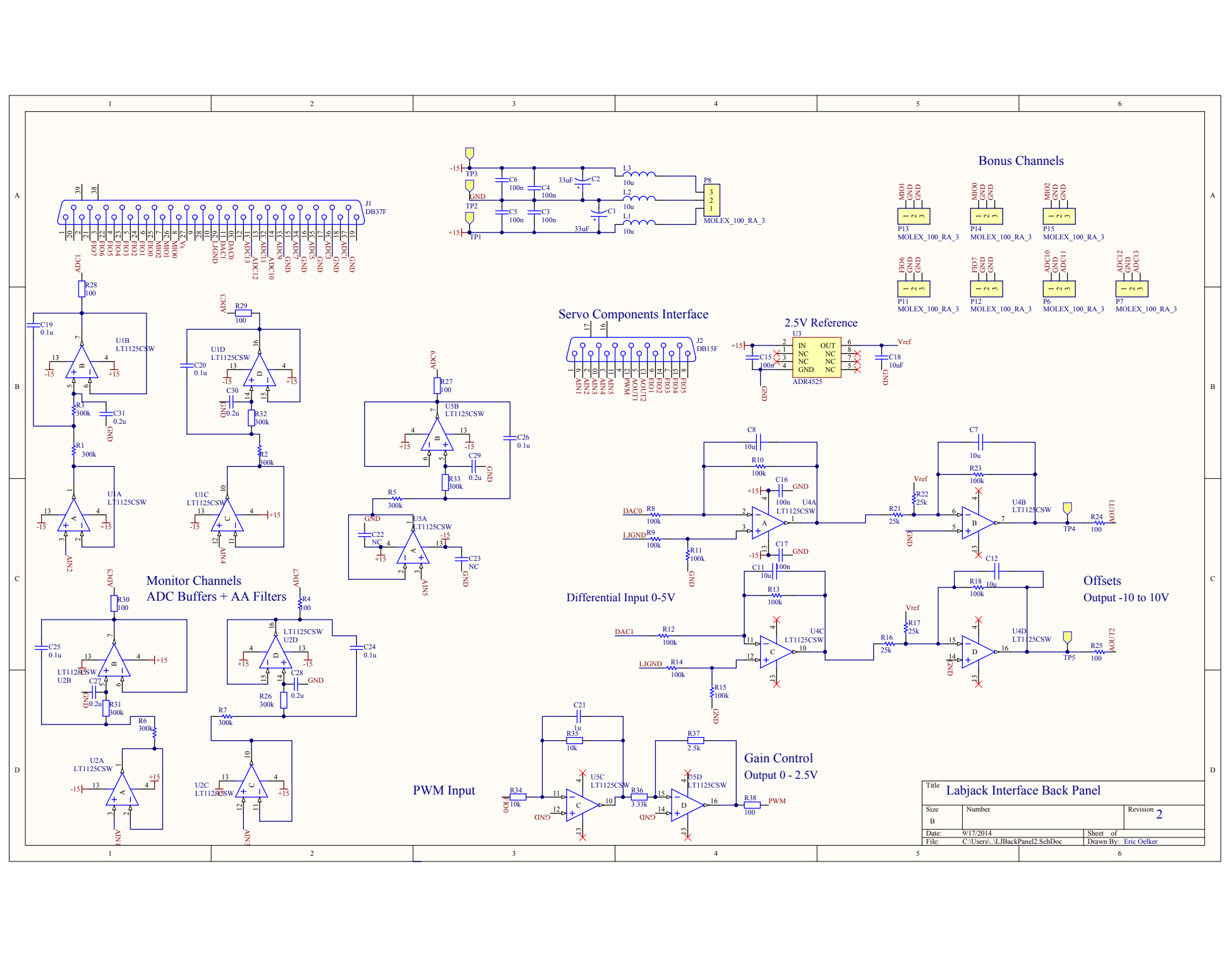
Bonus Channels
Servo Components Interface
2.5V Reference
Monitor Channels
ADC Buffers + AA Filters
Differential Input 0-5V
Offsets
Output -10 to 10V
PWM Input
Gain Control
Output 0 - 2.5V
Labjack Interface Back Panel
Size B
Number
Revision 2
Date: 9/17/2014
File: C:\Users\..\LJBackPanel2.SchDoc
Sheet of
Drawn By: Eric Oelker

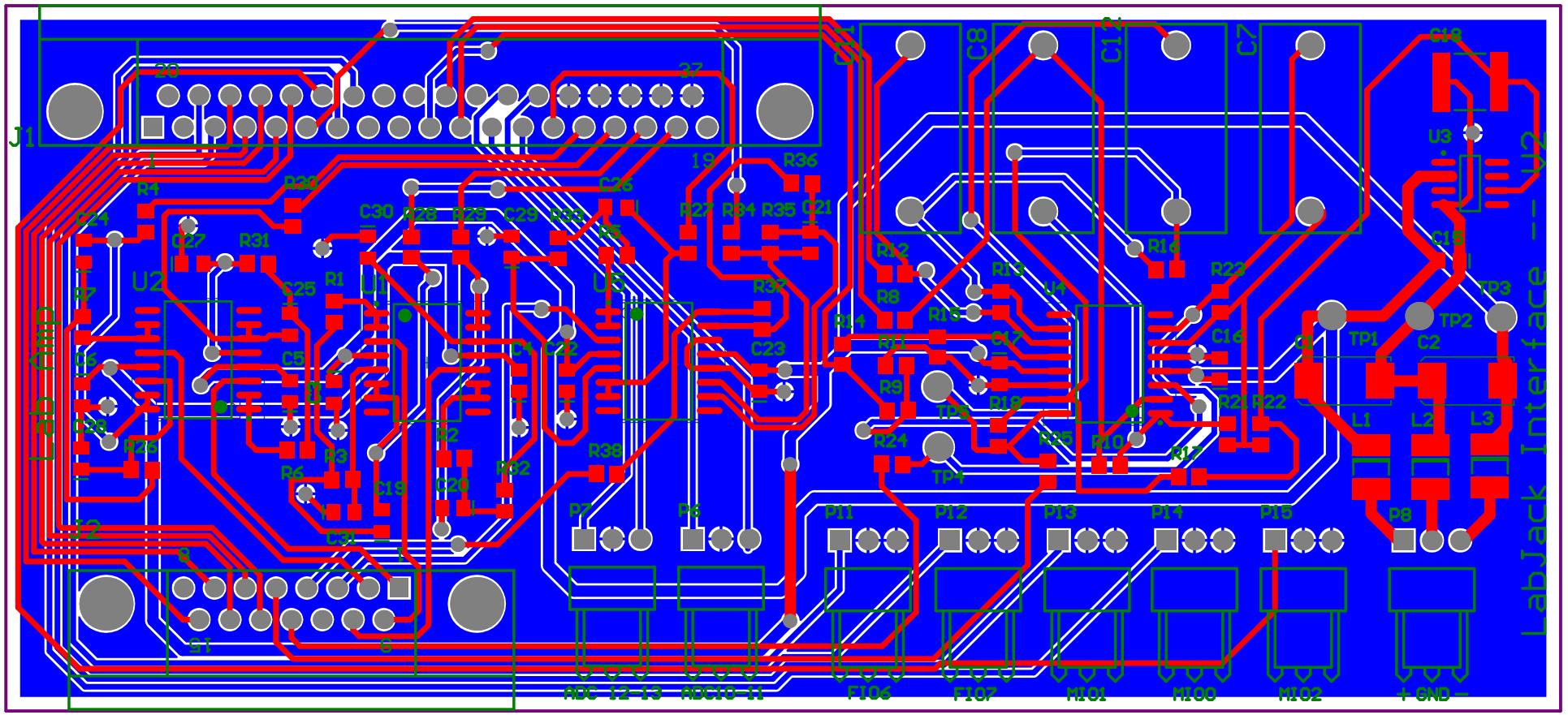
J1
J2
U1
U2
U3
U4
C8
C12
C7
C18
C19
C2
C16
C17
C23
C21
C22
C25
C26
C27
C28
C29
C30
C31
C3
C5
C6
C7
C19
C20
R1
R2
R3
R4
R6
R7
R8
R9
R10
R11
R12
R13
R14
R15
R16
R17
R18
R19
R20
R21
R22
R23
R24
R25
R26
R27
R28
R29
R30
R31
R32
R33
R34
R35
R36
R38
TP1
TP2
TP3
TP4
TP5
L1
L2
L3
P7
P6
P11
P12
P13
P14
P15
P8
ST1
ADC 12-13
ADC10-11
FIO6
FIO7
MIO1
MIO0
MIO2
+GND-
LabJack Interface -- V2