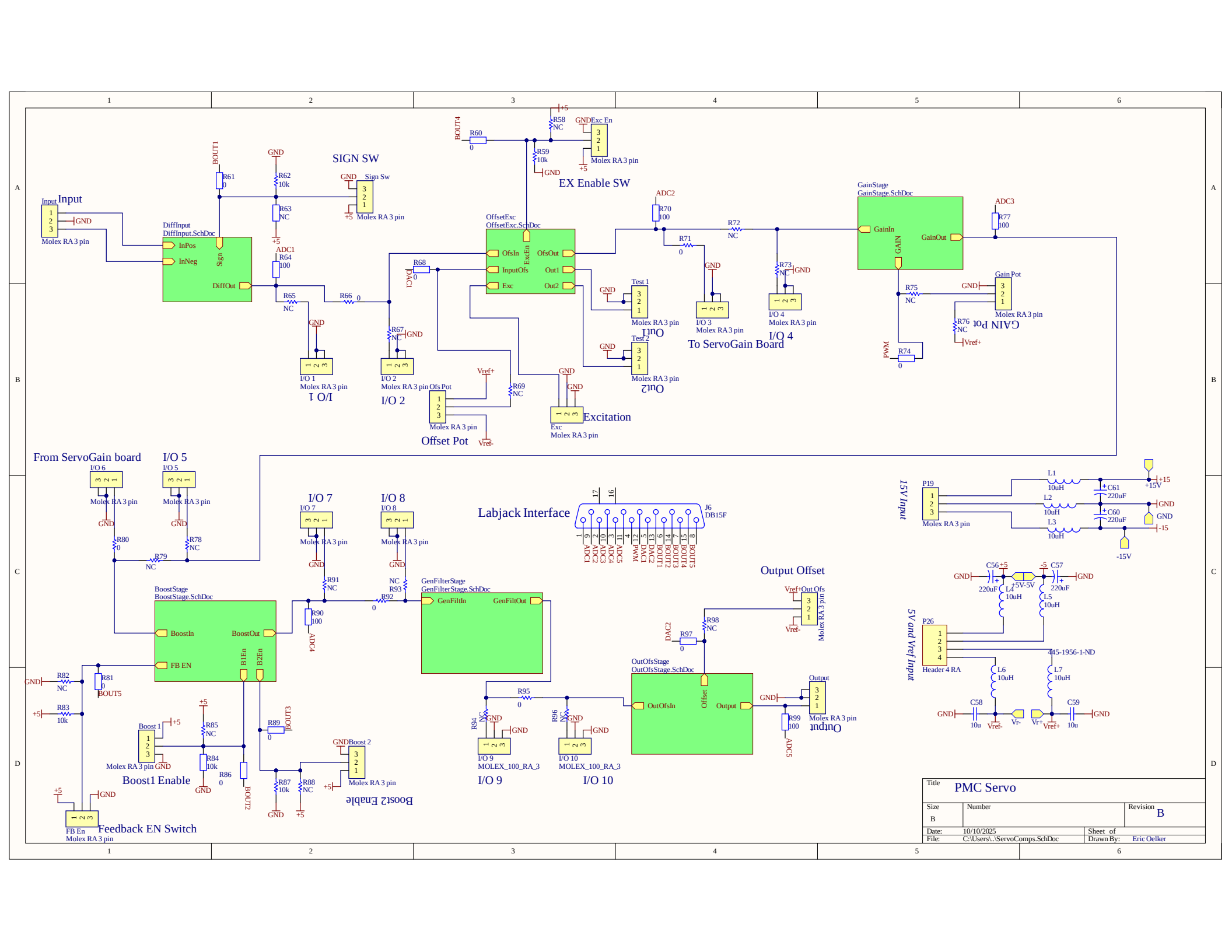
Input
Molex RA 3 pin
DiffInput
DiffInput.SchDoc
InPos
InNeg
Sign
DiffOut
SIGN SW
Sign Sw
EX Enable SW
OffsetExc
OffsetExc.SchDoc
OfsIn
InputOfs
Exc
OfsOut
Out1
Out2
ExcEn
GainStage
GainStage.SchDoc
GainIn
GainOut
GAIN
To ServoGain Board
I/O 1
I/O 2
I/O 3
I/O 4
Test 1
Test 2
Out1
Out2
Gain Pot
Offset Pot
Excitation
From ServoGain board
I/O 5
I/O 6
I/O 7
I/O 8
BoostStage
BoostStage.SchDoc
BoostIn
BoostOut
FB EN
B1En
B2En
Boost1 Enable
Boost2 Enable
FB En
Feedback EN Switch
Labjack Interface
J6
DB15F
GenFilterStage
GenFilterStage.SchDoc
GenFiltIn
GenFiltOut
Output Offset
OutOfsStage
OutOfsStage.SchDoc
OutOfsIn
Offset
Output
I/O 9
I/O 10
MOLEX_100_RA_3
15V Input
5V and Vref Input
P19
P26
Header 4 RA
445-1956-1-ND
+15V
-15V
+5V-5V
Vref+
Vref-
Vr+
Vr-
PWM
Title
PMC Servo
Size
B
Number
Revision
B
Date:
10/10/2025
Sheet of
File:
C:\Users\..\ServoComps.SchDoc
Drawn By:
Eric Oelker

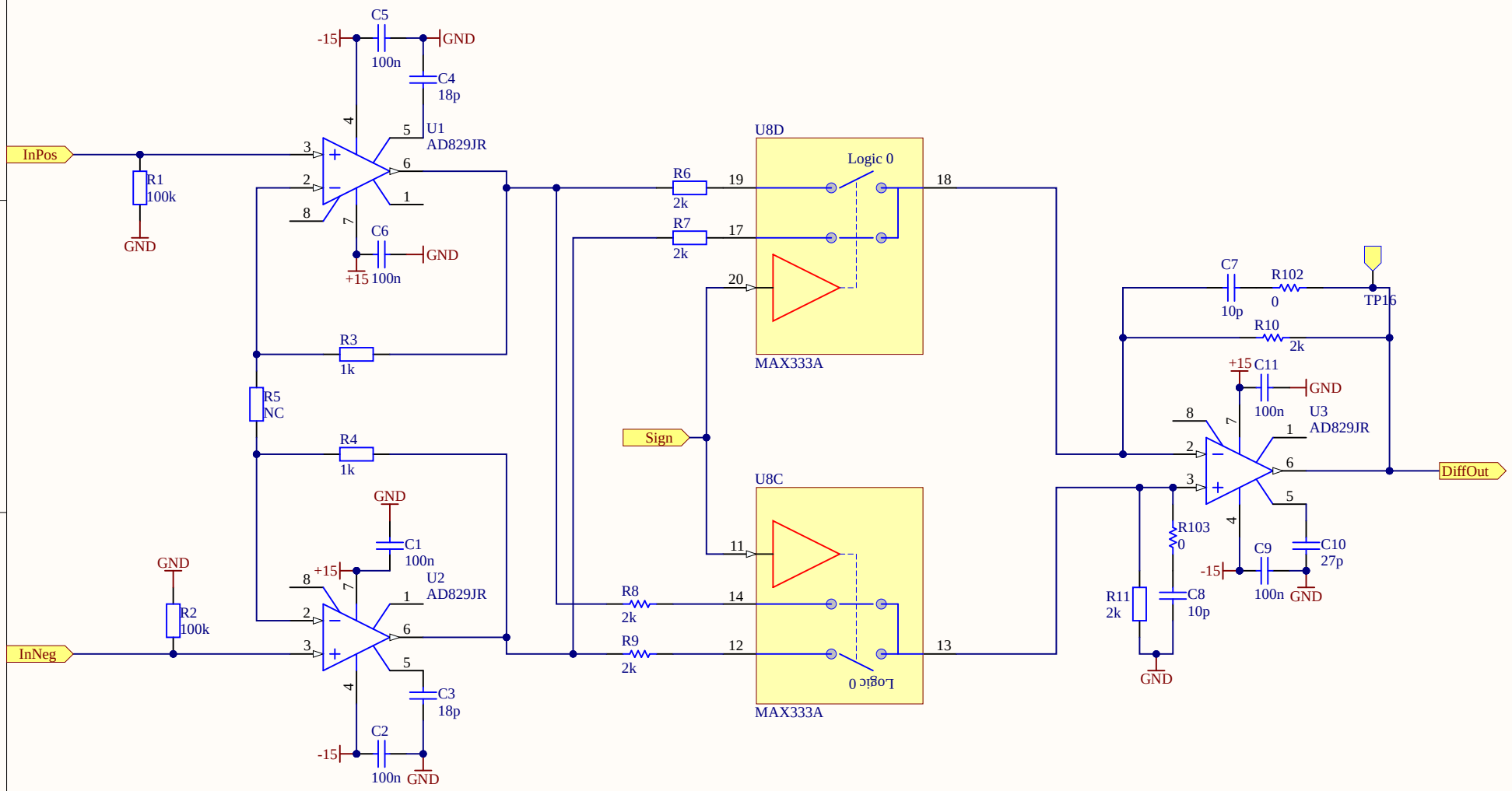

Stuff R5 to add up-front gain for small error signals, C3 and C4 must change accordingly. Also, R102 and R103 can be used for extra boost or whitening. C10 May need to be adjusted if gain of U3 is changed. See AD829 data sheet for details.

Title	Differential Input/Sign Stage	
Size: A	Number:	Revision: B
Date: 10/10/2025		Sheet of
File: C:\Users\..\DiffInput.SchDoc		Drawn By: Eric Oelker

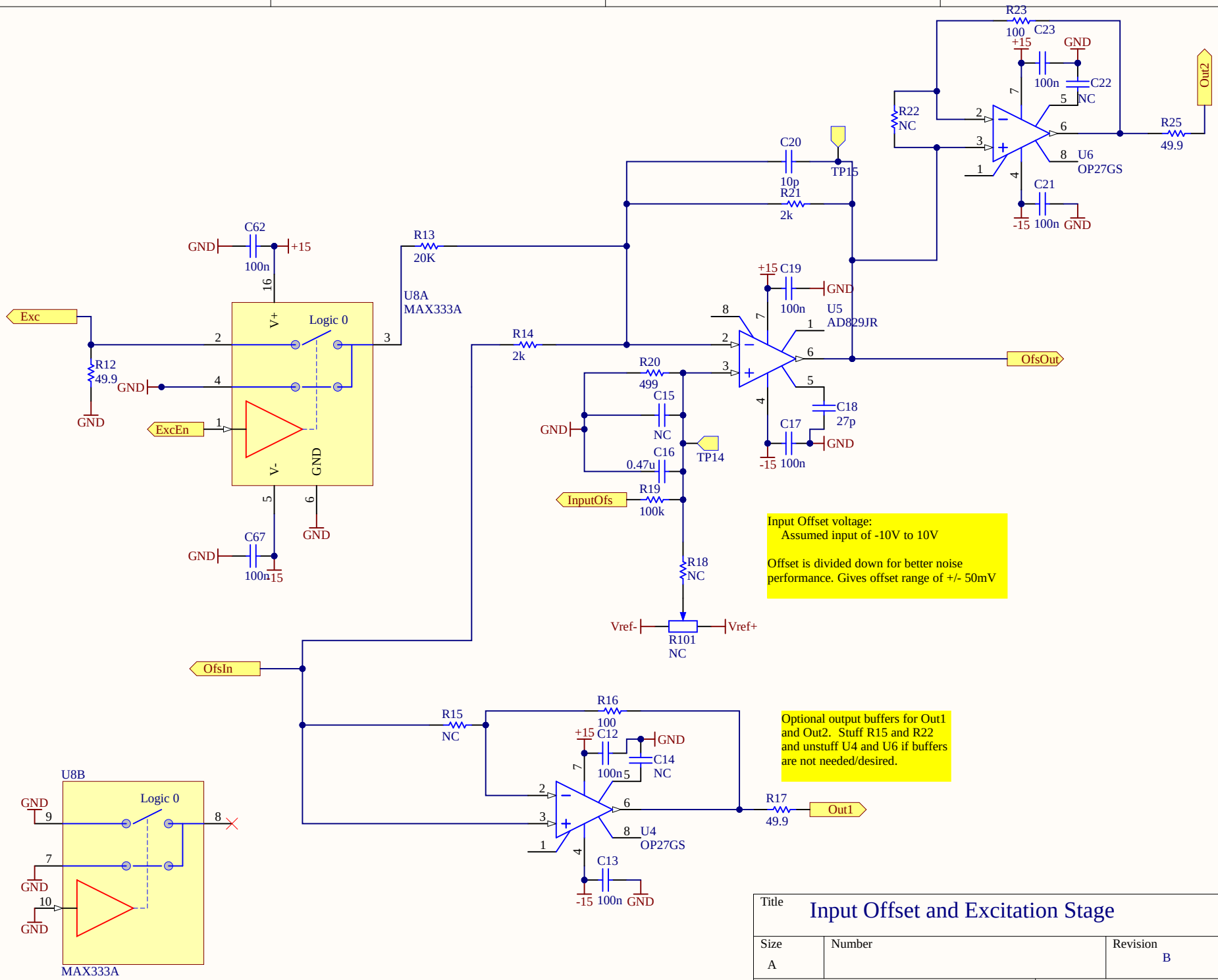
R23
100
C23
+15
GND
100n
C22
NC
R22
NC
Out2
R25
49.9
U6
OP27GS
C21
-15
100n
GND
C20
10p
TP15
R21
2k
C62
GND
+15
100n
R13
20K
U8A
MAX333A
Exc
R12
49.9
GND
ExcEn
Logic 0
V+
V-
GND
C67
100n
-15
+15
C19
100n
U5
AD829JR
R14
2k
R20
499
C15
NC
C16
0.47u
TP14
C18
27p
C17
100n
OfsOut
InputOfs
R19
100k
R18
NC
Vref-
Vref+
R101
NC
Input Offset voltage:
Assumed input of -10V to 10V
Offset is divided down for better noise performance. Gives offset range of +/- 50mV
OfsIn
R15
NC
R16
100
C12
100n
C14
NC
R17
49.9
Out1
U4
OP27GS
C13
100n
Optional output buffers for Out1 and Out2. Stuff R15 and R22 and unstuff U4 and U6 if buffers are not needed/desired.
U8B
Logic 0
MAX333A
Title
Input Offset and Excitation Stage
Size
A
Number
Revision
B
Date:
10/10/2025
Sheet of
File:
C:\Users\..\OffsetExc.SchDoc
Drawn By:
Eric Oelker

Gain control voltage:
Assumed input of 0V to 2.5V (Adjust R29 and R30 voltage divider if other range is desired)
Vg = 0 to 2.5 mV for -10 dB to 30 dB of gain.

Maximum output = +/-3V

Gain = Vg*16-10 (in dB)

Optional 2nd gain stage. See data sheet for optimal biasing at pin 2 for 2x gain stage.

R26 forms a voltage divider with a 100 ohm resistor inside of the AD603. The AD603 will saturate with > +/-1 V at the input. It will also get damaged if input is > +/-2V. One may need to hack on protection diodes after R26 for large error signals

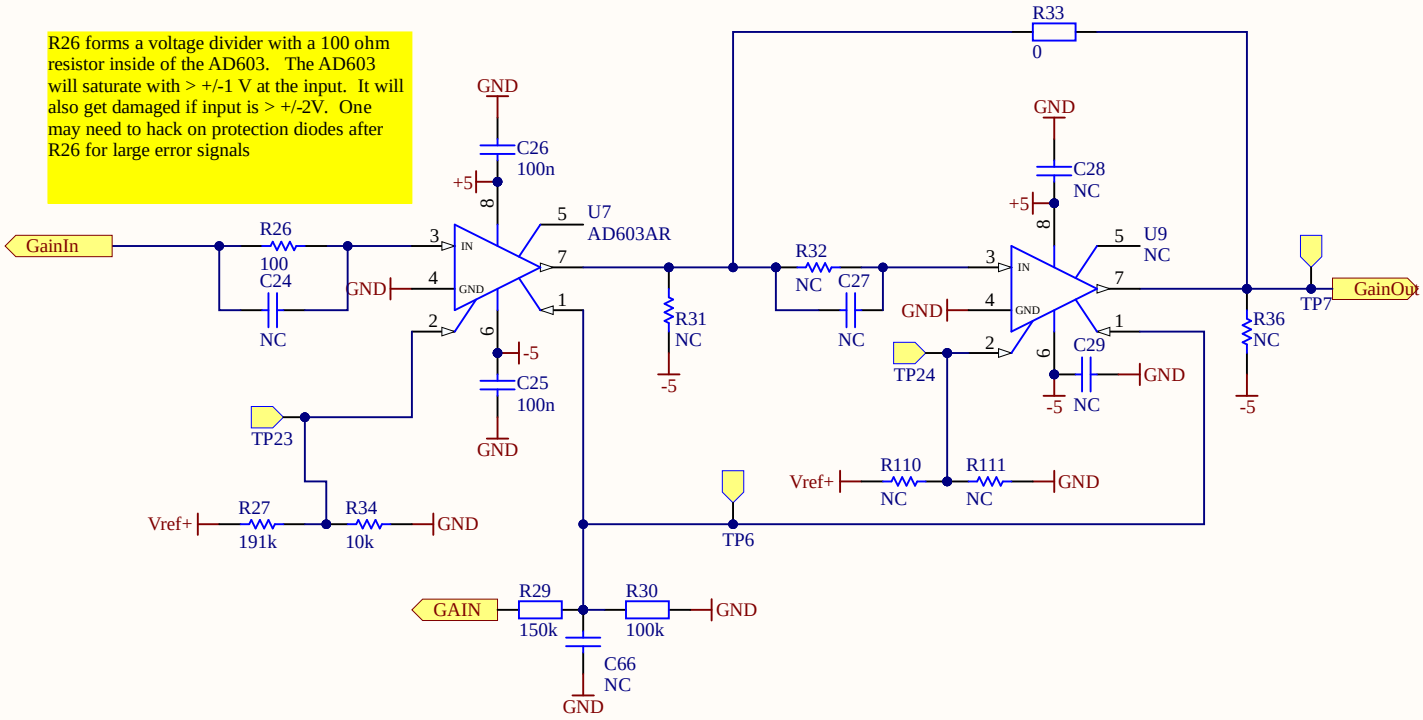

BYPASSED.
PMC Servo uses
ServoGain board

Title: Variable Gain Stage		
Size: A	Number:	Revision: B
Date: 10/10/2025		Sheet of
File: C:\Users\..\GainStage.SchDoc		Drawn By: Eric Oelker

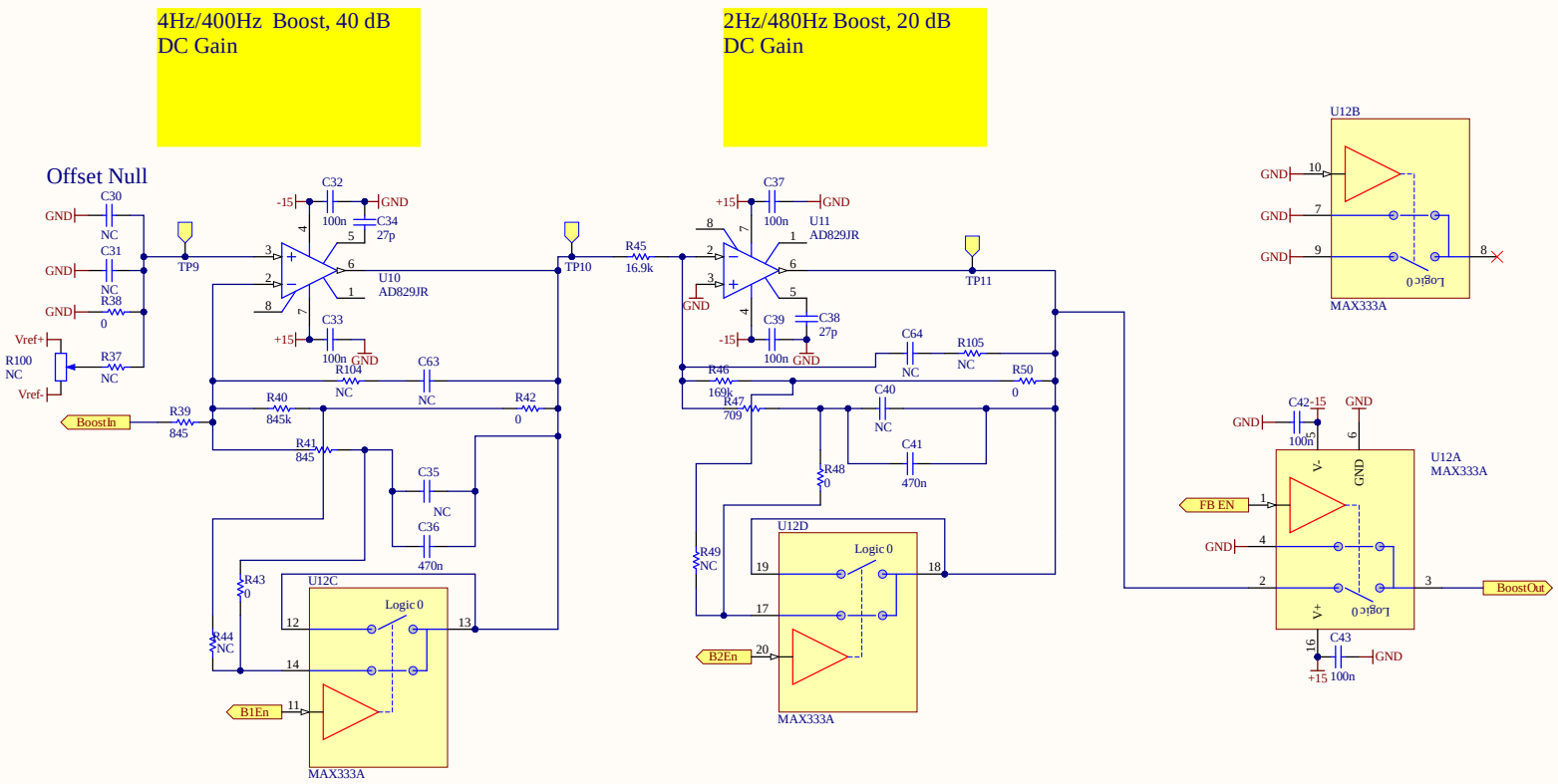

Title	Switchable Boost/Integration stage	
Size: B	Number	Revision: B
Date: 10/10/2025		Sheet of
File: C:\Users\..\BoostStage.SchDoc		Drawn By: Eric Oelker

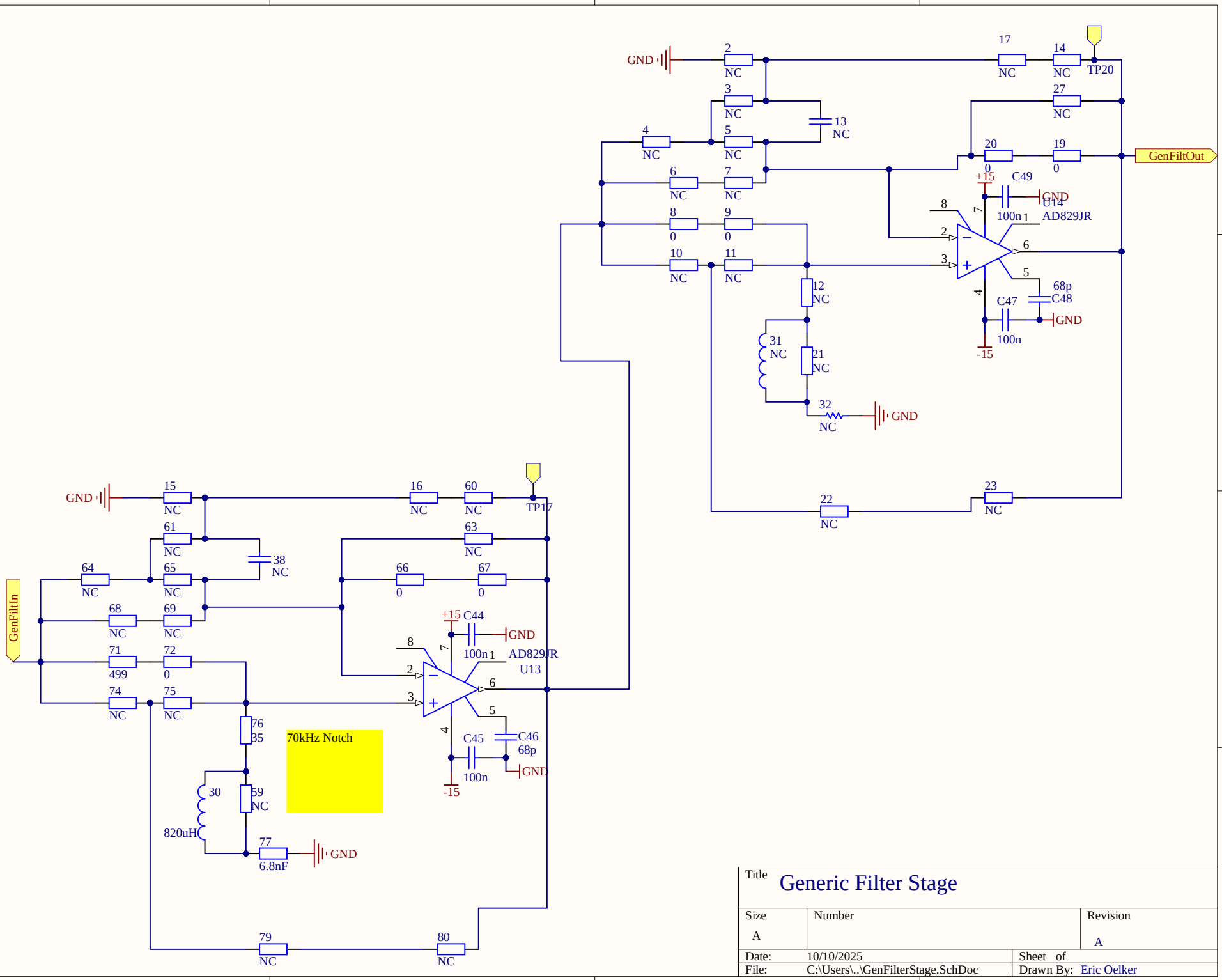

Title	Generic Filter Stage	
Size: A	Number:	Revision: A
Date: 10/10/2025		Sheet of
File: C:\Users\..\GenFilterStage.SchDoc		Drawn By: Eric Oelker

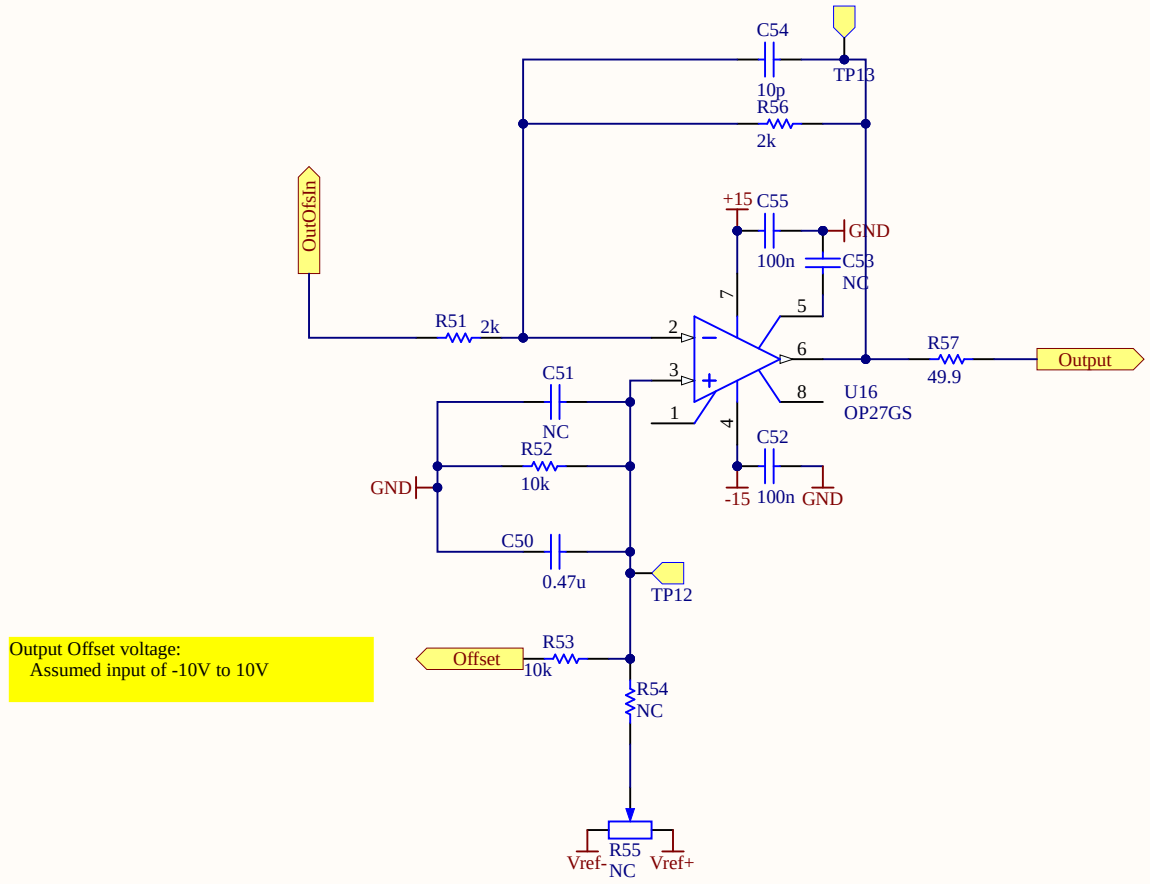

Title: Output Stage		
Size: A	Number:	Revision:
Date: 10/10/2025		Sheet of
File: C:\Users\..\OutOfsStage.SchDoc		Drawn By: Eric Oelker

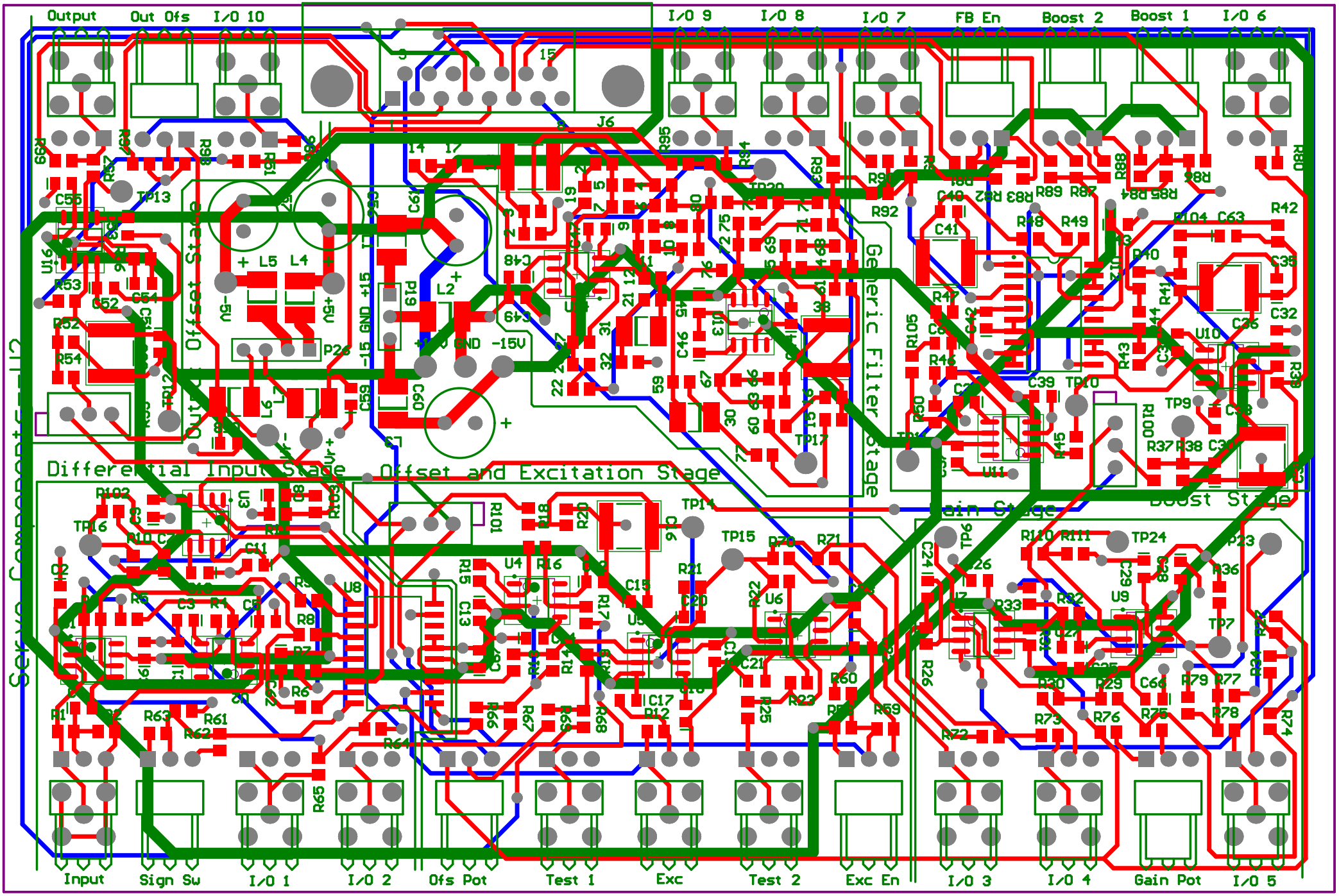
Output
Out Ofs
I/O 10
I/O 9
I/O 8
I/O 7
FB En
Boost 2
Boost 1
I/O 6
Differential Input Stage
Offset and Excitation Stage
Generic Filter Stage
Gain Stage
Boost Stage
Input
Sign Sw
I/O 1
I/O 2
Ofs Pot
Test 1
Exc
Test 2
Exc En
I/O 3
I/O 4
Gain Pot
I/O 5