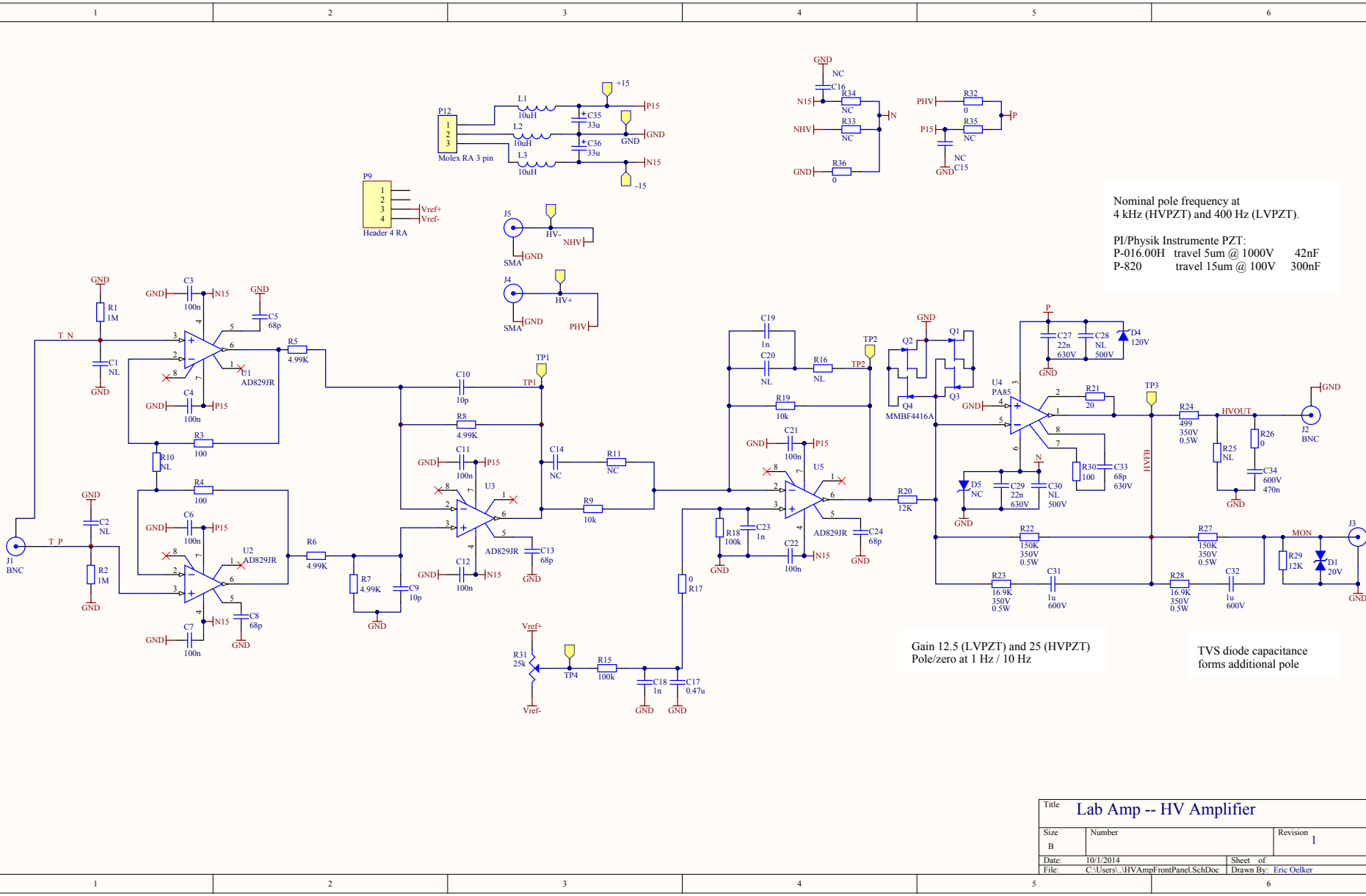
Nominal pole frequency at
4 kHz (HVPZT) and 400 Hz (LVPZT).
PI/Physik Instrumente PZT:
P-016.00H travel 5um @ 1000V 42nF
P-820 travel 15um @ 100V 300nF
Gain 12.5 (LVPZT) and 25 (HVPZT)
Pole/zero at 1 Hz / 10 Hz
TVS diode capacitance
forms additional pole
Title
Lab Amp -- HV Amplifier
Size
B
Number
Revision
1
Date: 10/1/2014
Sheet of
File: C:\Users\..\HVAmpFrontPanel.SchDoc
Drawn By: Eric Oelker

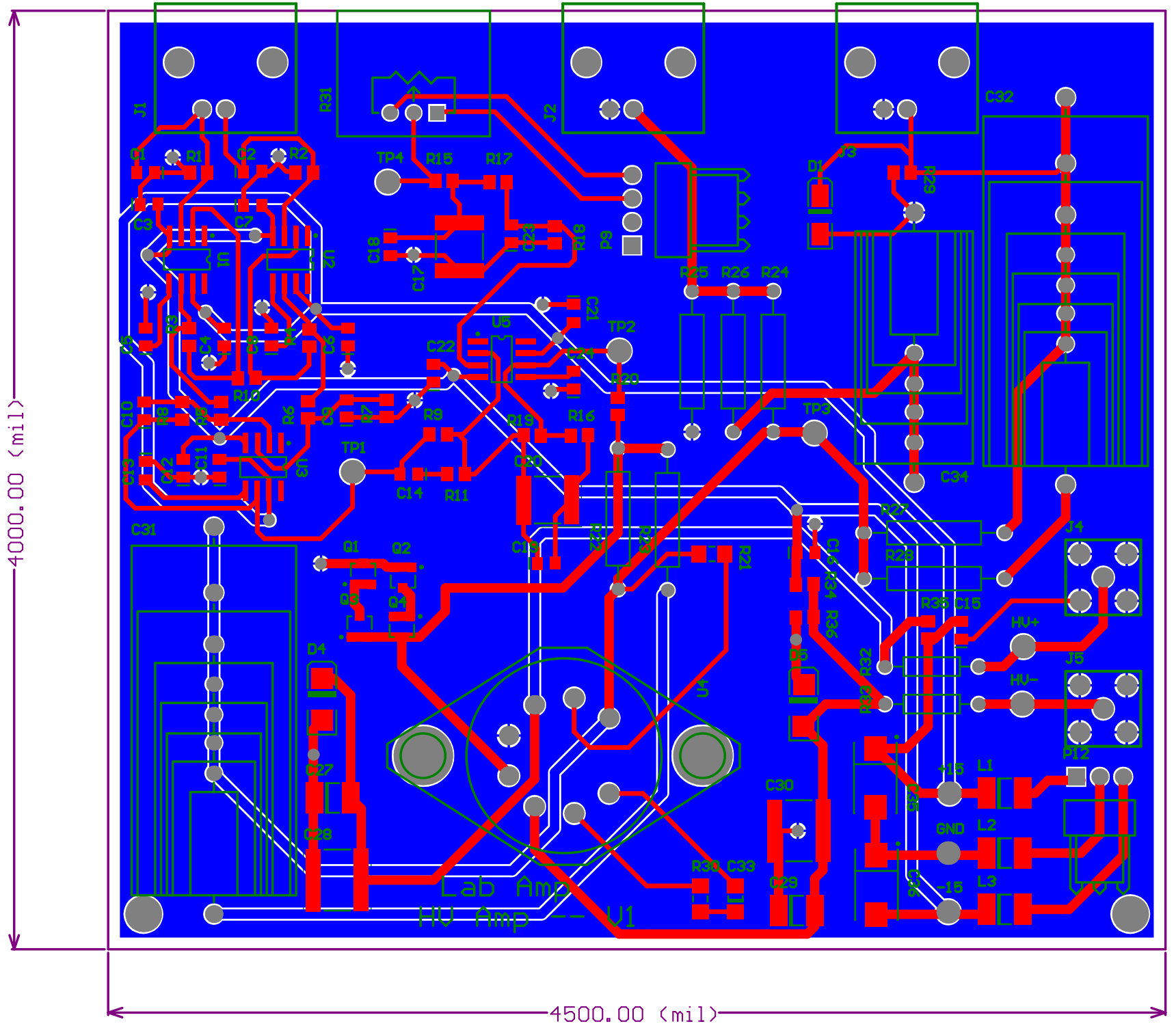

4000.00 (mil)
4500.00 (mil)
Lab Amp
HV Amp -- V1
J1
J2
J3
J4
J5
R31
TP4
R15
R17
R18
P9
C32
D1
R29
C1
R1
C2
R2
C3
C7
U1
U2
C18
C17
R25
R26
R24
C21
U5
TP2
C22
C24
R20
R10
R6
R7
R9
R19
R16
TP3
C10
R8
R5
C9
C11
C12
R12
U3
TP1
C14
R11
C20
C34
R27
C31
Q1
Q2
Q3
Q4
C19
R22
R23
R21
R28
R34
R36
R35
C15
HV+
HV-
D4
D5
R32
R37
U4
C27
C28
C30
+15
L1
P12
GND
L2
R30
C33
C29
-15
L3