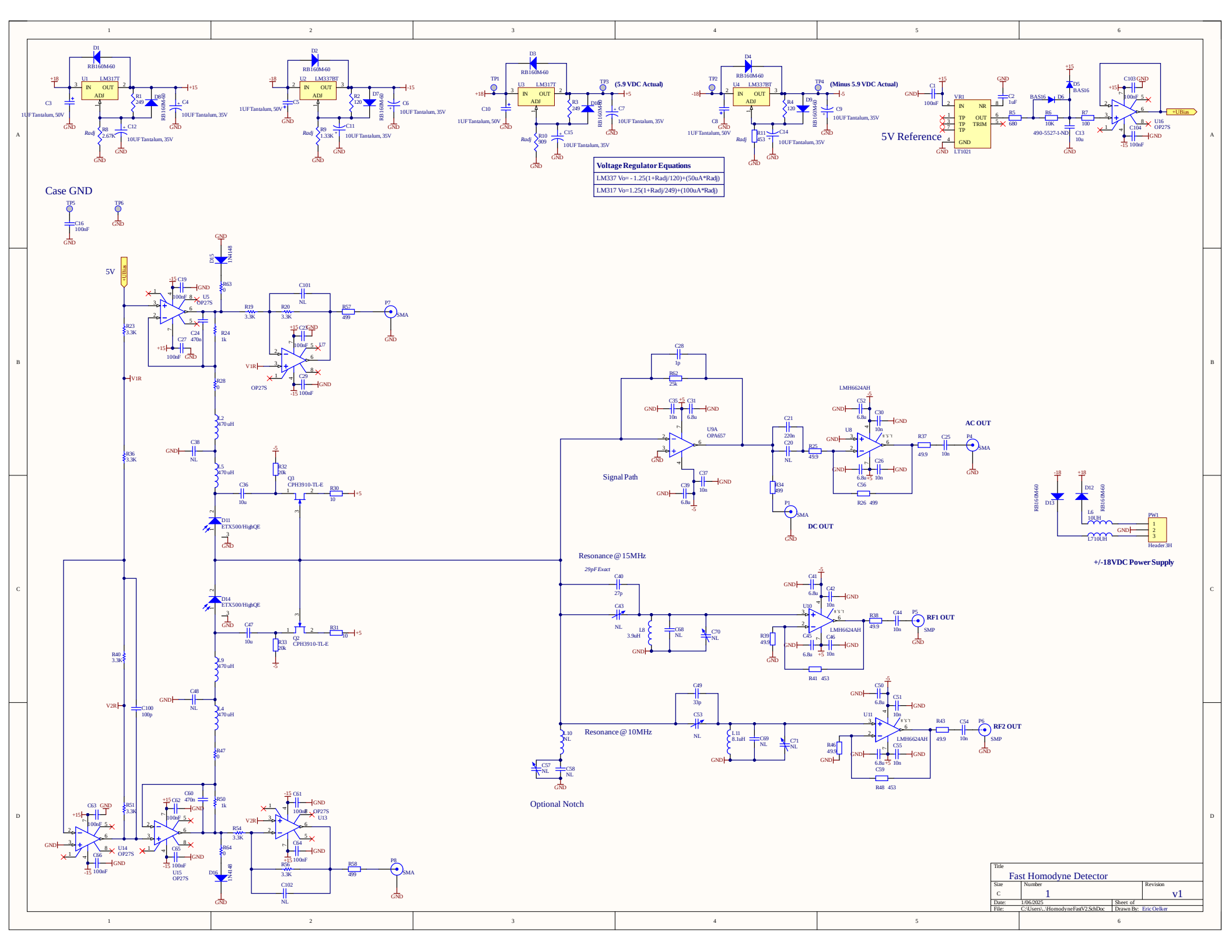
Case GND
5V
Signal Path
Resonance @ 15MHz
Resonance @ 10MHz
Optional Notch
29pF Exact
AC OUT
DC OUT
RF1 OUT
RF2 OUT
5V Reference
+/-18VDC Power Supply
(5.9 VDC Actual)
(Minus 5.9 VDC Actual)
Voltage Regulator Equations
LM337 Vo= - 1.25(1+Radj/120)+(50uA*Radj)
LM317 Vo=1.25(1+Radj/249)+(100uA*Radj)
Fast Homodyne Detector
Size C
Number 1
Revision v1
Date: 1/06/2025
File: C:\Users\..\HomodyneFastV2.SchDoc
Sheet of
Drawn By: Eric Oelker

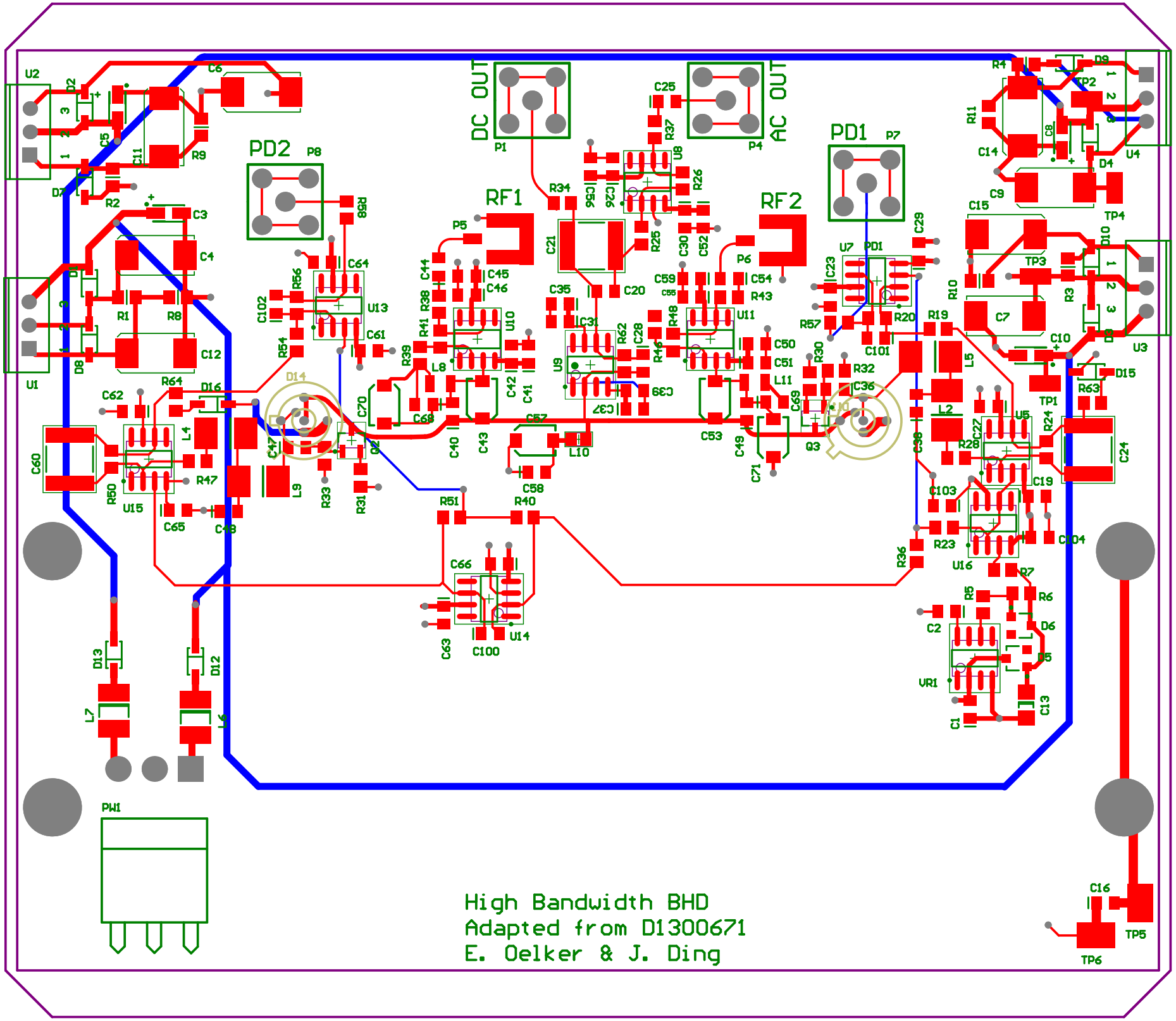
DC OUT
AC OUT
PD1
PD2
RF1
RF2
High Bandwidth BHD
Adapted from D1300671
E. Oelker & J. Ding

Comment	Description	Designator	Footprint	LibRef	Quantity	ComponentKind	DesignItemId	LogicalDesignator	PartType	Digikey Part Number	Distributor	Part Number
100nF	Capacitor	C1, C16, C19, C23, C27, C29, C61, C62, C63, C64, C65, C66, C103, C104	CC2013-0805	Cap	14	0	Cap	C1, C16, C19, C23, C27, C29, C61, C62, C63, C64, C65, C66, C103, C104	100nF		Digi-Key	311-1140-1-ND
1uF	Capacitor	C2	CC2013-0805	Cap	1	0	Cap	C2	1uF		Digi-Key	587-2229-1-ND
1UF Tantalum, 50V	Tantalum capacitor, surface mount	C3, C5, C8, C10	TC3216-1206	ChipTantalum	4	0	ChipTantalum	C3, C5, C8, C10	1UF Tantalum, 50V			
10UF Tantalum, 35V	Polarized Cap	C4, C6, C7, C9, C11, C12, C14, C15	7343-31	CAPACITOR POL	8	0	CAPACITOR POL	C4, C6, C7, C9, C11, C12, C14, C15	10UF Tantalum, 35V	478-1722-1-ND		
10u	Film Capacitor, axial lead	C13	CC3216-1206	CapFilmAxial	1	0	CapFilmAxial	C13	10u		Digi-Key	490-5527-1-ND
NL	Capacitor, surface mount, Capacitor	C20, C38, C48, C58, C68, C69, C101, C102	CC2013-0805	ChipCap, Cap	8	0	ChipCap, Cap	C20, C38, C48, C58, C68, C69, C101, C102	NL		Digi-Key, None	490-1642-1-ND, 311-1140-1-ND, [NoValue], 311-1107-1-ND
220n	Capacitor, surface mount	C21	CC5650-2220	ChipCap	1	0	ChipCap	C21	220n		Digi-Key	399-5385-1-ND
470n	Capacitor, surface mount	C24, C60	CC5650-2220	ChipCap	2	0	ChipCap	C24, C60	470n		Digi-Key	399-5385-1-ND
10n	Capacitor, surface mount	C25, C26, C30, C35, C37, C42, C44, C46, C51, C54, C55	CC2013-0805	ChipCap	11	0	ChipCap	C25, C26, C30, C35, C37, C42, C44, C46, C51, C54, C55	10n		Digi-Key	490-1642-1-ND
1p	Capacitor, surface mount	C28	CC2013-0805	ChipCap	1	0	ChipCap	C28	1p		Digi-Key	490-1642-1-ND
6.8u	Capacitor, surface mount	C31, C39, C41, C45, C50, C52, C56, C59	CC2013-0805	ChipCap	8	0	ChipCap	C31, C39, C41, C45, C50, C52, C56, C59	6.8u		Digi-Key	399-3136-1-ND
10u	Capacitor	C36, C47	CC2013-0805	Cap	2	0	Cap	C36, C47	10u		Digi-Key	311-1122-1-ND
27p	Capacitor, surface mount	C40	CC2013-0805	ChipCap	1	0	ChipCap	C40	27p		Digi-Key	311-1102-1-ND
68 pF	Variable or Adjustable Capacitor	C43, C53, C57, C70, C71	JZCAP	Cap Var	5	0	Cap Var	C43, C53, C57, C70, C71	68 pF			
33p	Capacitor, surface mount	C49	CC2013-0805	ChipCap	1	0	ChipCap	C49	33p		Digikey	311-1111-1-ND
100p	Capacitor, surface mount	C100	CC2013-0805	ChipCap	1	0	ChipCap	C100	100p		None	
RB160M-60	High Conductance Fast Diode, Default Diode	D1, D2, D3, D4, D7, D8, D9, D10, D12, D13	SOD123	Diode 1N4148, Diode	10	0	Diode 1N4148, Diode	D1, D2, D3, D4, D7, D8, D9, D10, D12, D13	RB160M-60	RB160M-60CT-ND, RB162M-60CT-ND		
BAS16	Single diode in SOT23 package	D5, D6	SO-G3/C2.25	DIODE_SOT23	2	0	DIODE_SOT23	D5, D6	BAS16		Digi-Key	BAS16FSCT-ND
ETX500/HighQE	Photosensitive Diode	D11, D14	HighQEPDAndETX500	Photo Sen	2	0	Photo Sen	D11, D14	ETX500/HighQE		JDSU	ETX500
1N4148	High Conductance Fast Diode	D15, D16	SOD123	Diode 1N4148	2	0	Diode 1N4148	D15, D16	1N4148	RB162M-60CT-ND		
470 uH	Inductor	L2, L4, L5, L9	CL4523-1812_LONG	Inductor	4	0	Inductor	L2, L4, L5, L9	470 uH		Coilcraft	1812PS-103KL
10UH		L6, L7	1812	INDUCTOR	2	0	INDUCTOR	L6, L7	10UH	732-3067-1-ND		
Inductor	Coil Craft Inductor	L8, L11	2520	Inductor	2	0	Inductor	L8, L11	Inductor			
NL	Inductor	L10	INDC2012L	Inductor	1	0	Inductor	L10	NL			
SMA	SMA, PCB Mount, Right Angle	P1, P4, P7, P8	SMA	SMA	4	0	SMA	P1, P4, P7, P8	SMA		Digi-Key	ARF1205-ND
SMP	BNC Elbow Connector	P5, P6	SMP-MSLD-PCS	BNC	2	0	BNC	P5, P6	SMP	ARF1594-ND		
Header 3H	Header, 3-Pin, Right Angle	PW1	Molex_156_RA_3	Header 3H	1	0	Header 3H	PW1	Header 3H	WM5236-ND	Digi-Key	WM5236-ND
CPH3910-TL-E	N-Channel JFET, 25 V, 20 to 40 mA, 40 mS, 3-Pin CPH, Pb-Free, Tape and Reel	Q2, Q3	ONSC-CPH-3_V	CMP-1062-00012-1	2	0	CMP-1062-00012-1	Q2, Q3	CPH3910-TL-E			
249		R1, R3	2012[0805]	MYRES	2	0	MYRES	R1, R3	249	TNP249ABCT-ND		
120		R2, R4	2012[0805]	MYRES	2	0	MYRES	R2, R4	120	P120DACT-ND		
680	Resistor, surface mount	R5	CR2012-0805	ChipRes1	1	0	ChipRes1	R5	680		Digi-Key	RG20P680BCT-ND
10K	Resistor, surface mount	R6	CR2012-0805	ChipRes1	1	0	ChipRes1	R6	10K		Digi-Key	RG20P10.0KBCT-ND
100	Resistor, surface mount	R7	CR2012-0805	ChipRes1	1	0	ChipRes1	R7	100		Digi-Key	RG20P100BCT-ND
2.67K		R8	2012[0805]	MYRES	1	0	MYRES	R8	2.67K	A103670CT-ND		
1.33K		R9	2012[0805]	MYRES	1	0	MYRES	R9	1.33K	RG20P1.33KBCT-ND		
909		R10	2012[0805]	MYRES	1	0	MYRES	R10	909	A103523CT-ND		
453	Resistor, surface mount	R11, R41, R48	CR2012-0805	ChipRes1	3	0	ChipRes1	R11, R41, R48	453		Digi-Key	RG20P453BCT-ND
3.3K	Resistor	R19, R20, R23, R36, R40, R51, R54, R56	CR2012-0805	Res1	8	0	Res1	R19, R20, R23, R36, R40, R51, R54, R56	3.3K		Digi-Key	RG20P3.3KBCT-ND
1k	Resistor	R24, R50	CR2012-0805	Res1	2	0	Res1	R24, R50	1k		Digi-Key	RG20P1.0KBCT-ND
49.9	Resistor, surface mount	R25, R37, R38, R39, R43, R46	CR2012-0805	ChipRes1	6	0	ChipRes1	R25, R37, R38, R39, R43, R46	49.9		Digi-Key	RR12Q49.9DCT-ND
499	Resistor, surface mount	R26, R34, R57, R58	CR2012-0805	ChipRes1	4	0	ChipRes1	R26, R34, R57, R58	499		Digi-Key	RG20P453BCT-ND, RR12Q49.9DCT-ND, 311-499CRCT-ND
0	Resistor	R28, R47, R63, R64	CR2012-0805	Res1	4	0	Res1	R28, R47, R63, R64	0		Digi-Key	P0.0GCT-ND, RG20P3.3KBCT-ND
10	Resistor, surface mount	R30, R31	CR2012-0805	ChipRes1	2	0	ChipRes1	R30, R31	10		Digi-Key	RR12Q49.9DCT-ND
20k	Resistor, surface mount	R32, R33	CR2012-0805	ChipRes1	2	0	ChipRes1	R32, R33	20k		Digi-Key	RR12Q49.9DCT-ND
25k	Resistor, surface mount	R62	CR2012-0805	ChipRes1	1	0	ChipRes1	R62	25k		Digi-Key	RG20P453BCT-ND
TESTPT	PCB Testpoint	TP1, TP2, TP3, TP4	smt_tp_small	TESTPT	4	0	TESTPT	TP1, TP2, TP3, TP4	TESTPT	5015KCT-ND		
TESTPT	PCB Testpoint	TP5, TP6	smt_tp	TESTPT	2	0	TESTPT	TP5, TP6	TESTPT	5016KCT-ND		
LM317T	Three-Terminal Adjustable Output Positive Voltage Regulator	U1, U3	221A-06	LM317T	2	0	LM317T	U1, U3	LM317T	LM317TFS-ND		
LM337BT	3-Terminal Adjustable Negative Voltage Regulator	U2	221A-06	LM337BT	1	0	LM337BT	U2	LM337BT	LM337TFS-ND		
LM337BT	3-Terminal Adjustable Negative Voltage Regulator	U4	221A-04	LM337BT	1	0	LM337BT	U4	LM337BT	LM337TFS-ND		
OP27S	Low-Noise, Precision Operational Amplifier	U5, U7, U13, U14, U15, U16	SO-8_N	OP27GS	6	0	OP27GS	U5, U7, U13, U14, U15, U16	OP27S			
LMH6624AH	350MHz, Ultra-Low-Noise Op Amp	U8, U10, U11	NSO8_L	MAX4107ESA	3	0	MAX4107ESA	U8, U10, U11	LMH6624AH	LMH6624MA-ND		
OPA657	1.6 GHz, Low Noise, Fet-Input Operational Amplifier, 8 to 12 V, -40 to 85 degC, 8-pin SOIC (D8), Green (RoHS & no Sb/Br)	U9	TI-D8_N	CMP-0016-00042-1	1	0	CMP-0016-00042-1	U9	OPA657			
LT1021	High-Precision 5 Volt Reference	VR1	SO-8_N	AD586JQ	1	0	AD586JQ	VR1	LT1021			