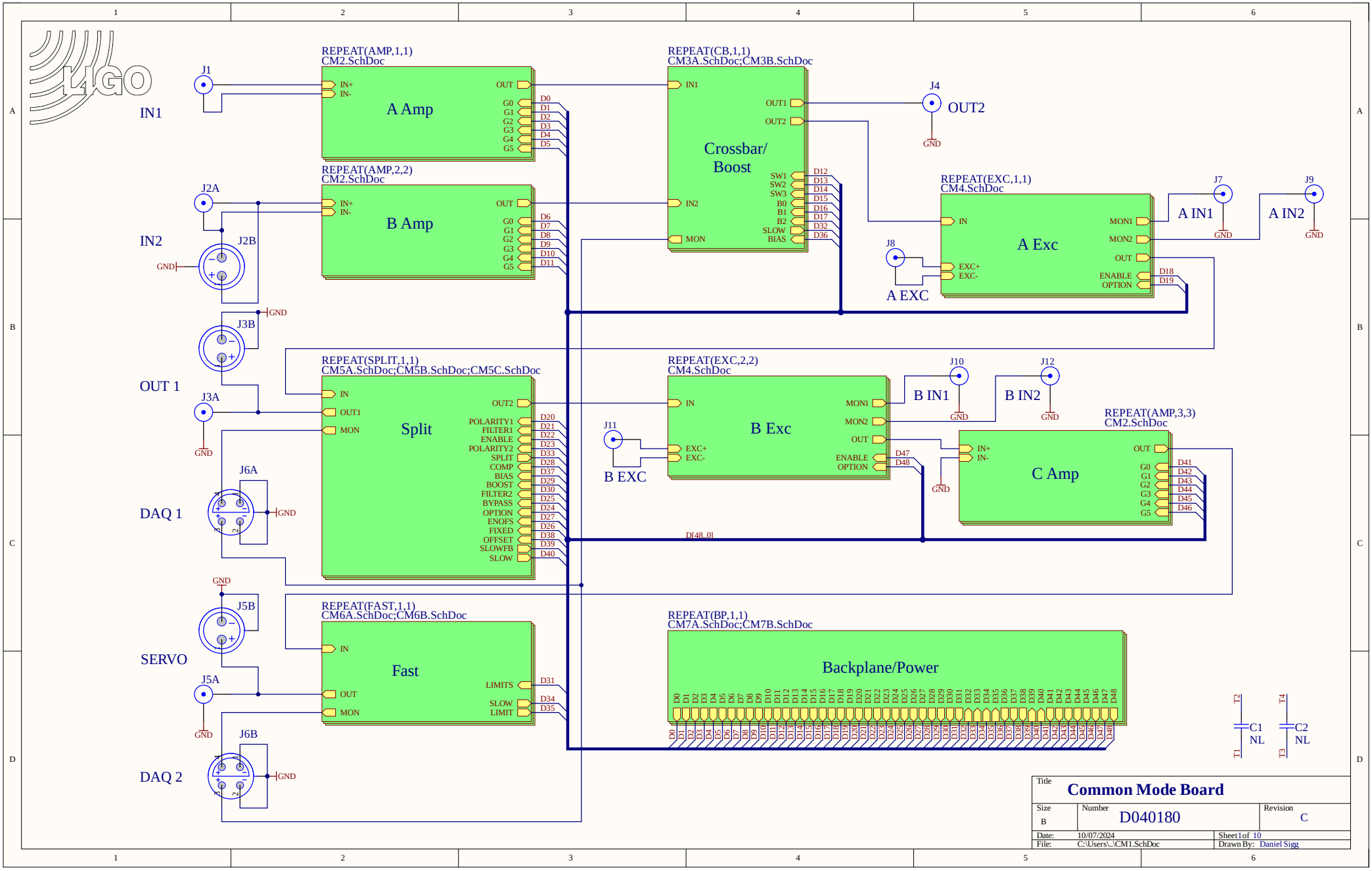
REPEAT(AMP,1,1)
CM2.SchDoc
A Amp
REPEAT(AMP,2,2)
CM2.SchDoc
B Amp
REPEAT(CB,1,1)
CM3A.SchDoc;CM3B.SchDoc
Crossbar/
Boost
REPEAT(EXC,1,1)
CM4.SchDoc
A Exc
REPEAT(SPLIT,1,1)
CM5A.SchDoc;CM5B.SchDoc;CM5C.SchDoc
Split
REPEAT(EXC,2,2)
CM4.SchDoc
B Exc
REPEAT(AMP,3,3)
CM2.SchDoc
C Amp
REPEAT(FAST,1,1)
CM6A.SchDoc;CM6B.SchDoc
Fast
REPEAT(BP,1,1)
CM7A.SchDoc;CM7B.SchDoc
Backplane/Power
IN1
IN2
OUT 1
DAQ 1
SERVO
DAQ 2
OUT2
A IN1
A IN2
A EXC
B IN1
B IN2
B EXC
D[48..0]
C1
NL
C2
NL
Common Mode Board
D040180
C
10/07/2024
C:\Users\..\CM1.SchDoc
Sheet1of 10
Daniel Sigg

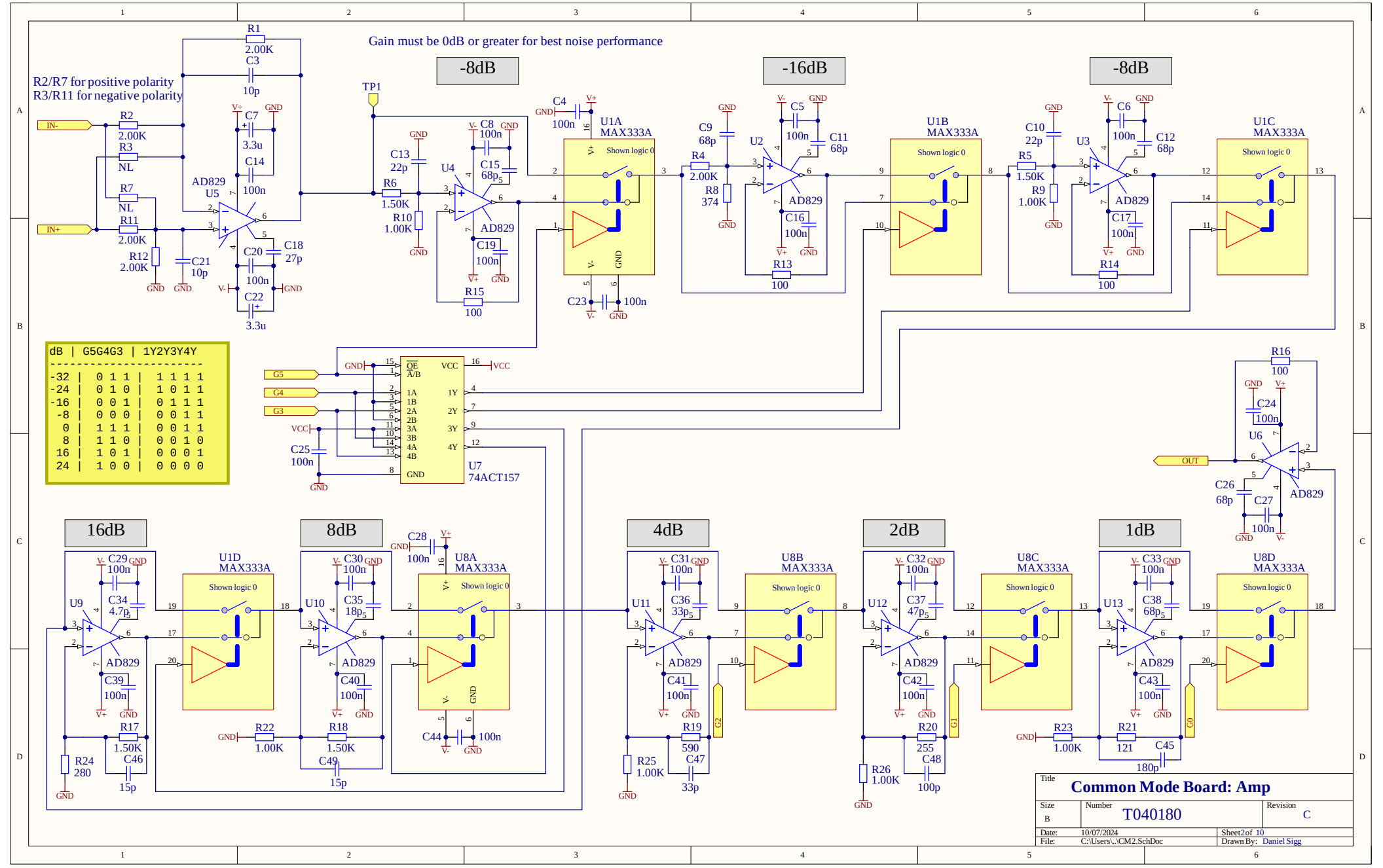
Gain must be 0dB or greater for best noise performance
R2/R7 for positive polarity
R3/R11 for negative polarity
-8dB
-16dB
-8dB
16dB
8dB
4dB
2dB
1dB
dB | G5G4G3 | 1Y2Y3Y4Y
-32 | 0 1 1 | 1 1 1 1
-24 | 0 1 0 | 1 0 1 1
-16 | 0 0 1 | 0 1 1 1
-8 | 0 0 0 | 0 0 1 1
0 | 1 1 1 | 0 0 1 1
8 | 1 1 0 | 0 0 1 0
16 | 1 0 1 | 0 0 0 1
24 | 1 0 0 | 0 0 0 0
U1A MAX333A
U1B MAX333A
U1C MAX333A
U1D MAX333A
U8A MAX333A
U8B MAX333A
U8C MAX333A
U8D MAX333A
Shown logic 0
U7 74ACT157
AD829
Common Mode Board: Amp
T040180
C
B
10/07/2024
Sheet2of 10
C:\Users\..\CM2.SchDoc
Drawn By: Daniel Sigg

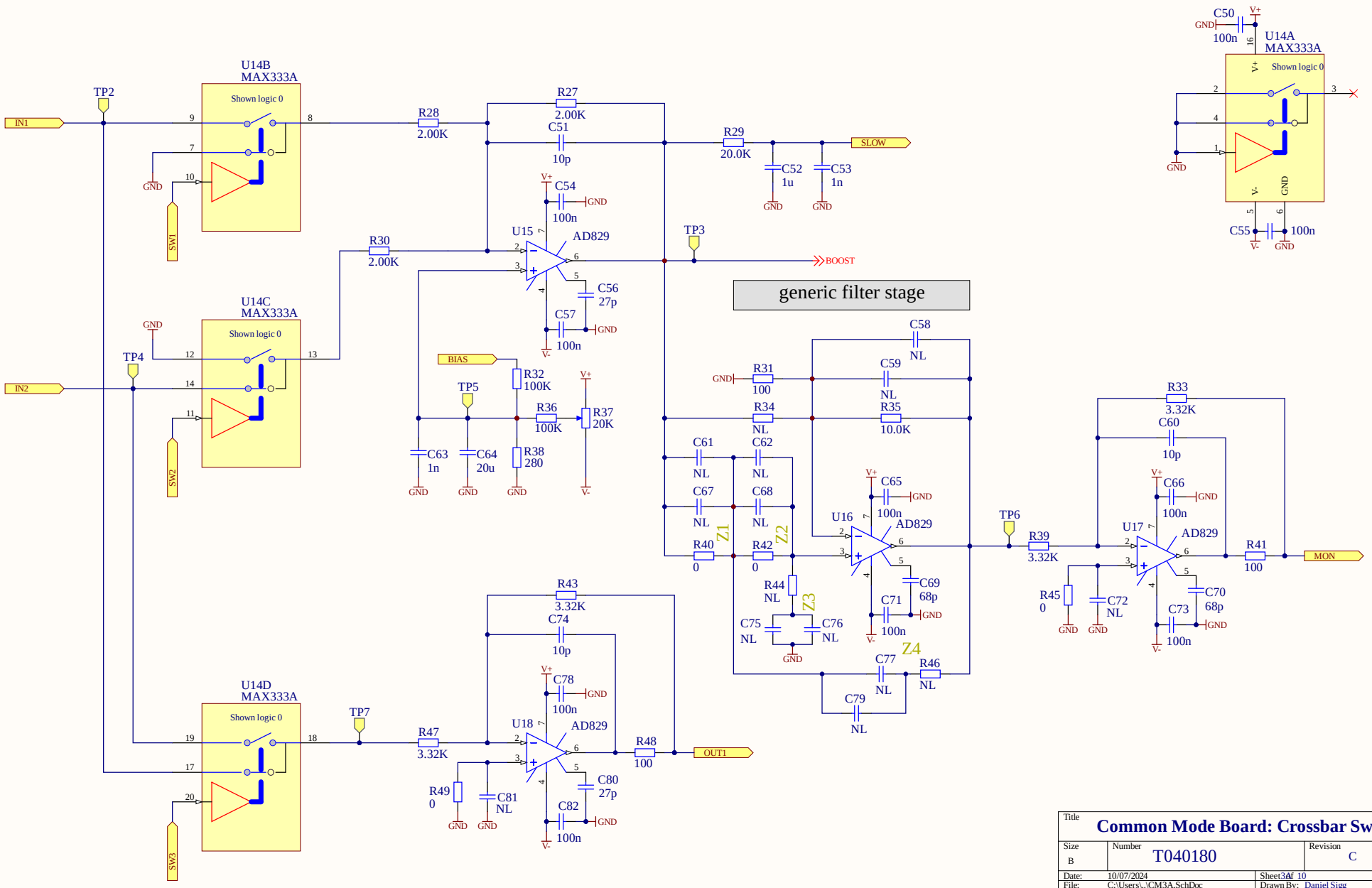

Title	**Common Mode Board: Crossbar Switch**	
Size: B	Number: T040180	Revision: C
Date: 10/07/2024	Sheet 3 of 10	
File: C:\Users\..\CM3A.SchDoc	Drawn By: Daniel Sigg	

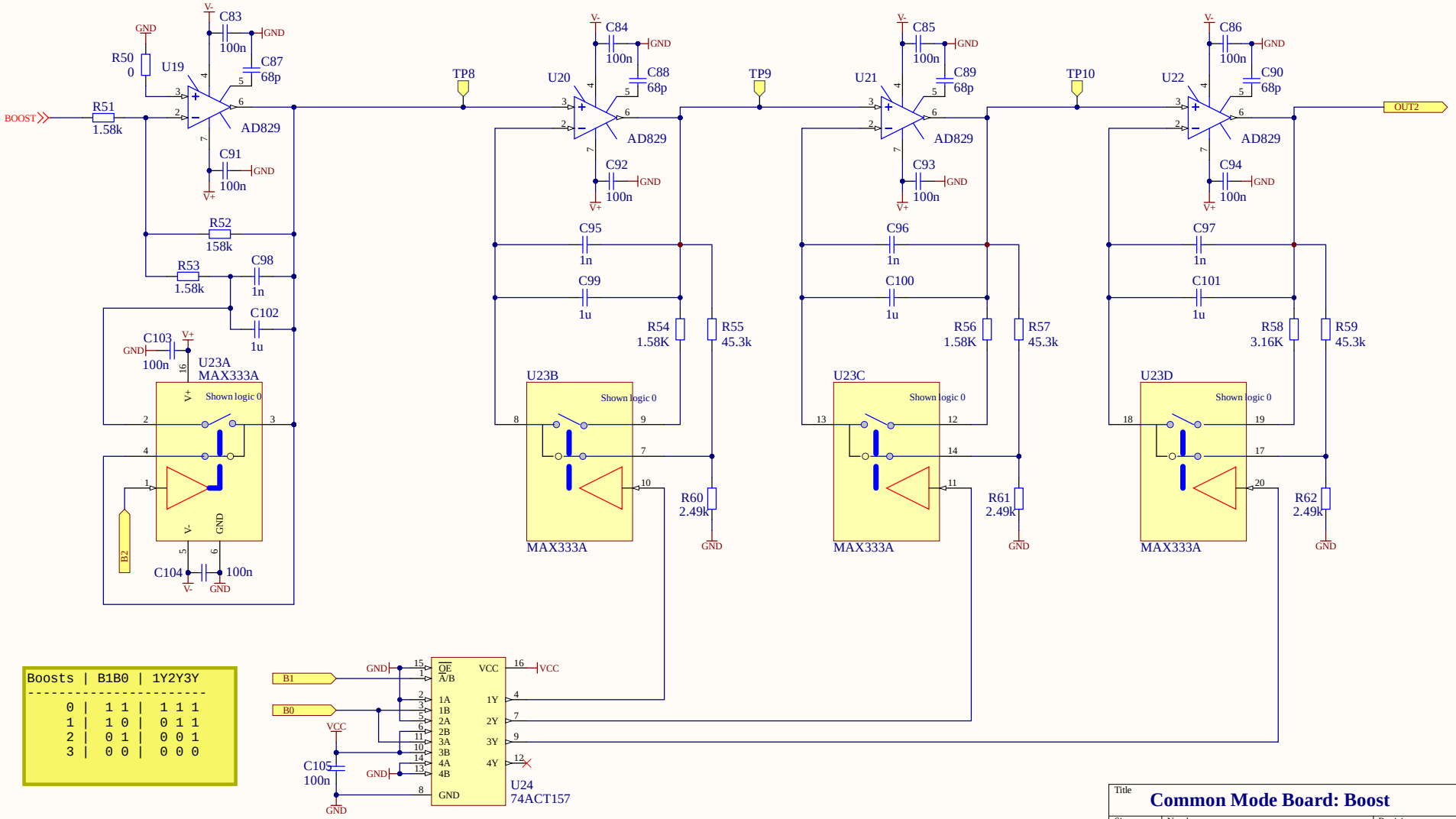

Boosts	B1B0	1Y2Y3Y
0	1 1	1 1 1
1	1 0	0 1 1
2	0 1	0 0 1
3	0 0	0 0 0

Title	**Common Mode Board: Boost**	
Size: B	Number: T040180-C	Revision: C
Date: 10/07/2024	Sheet 3 of 10	
File: C:\Users\..\CM3B.SchDoc	Drawn By: Daniel Sigg	

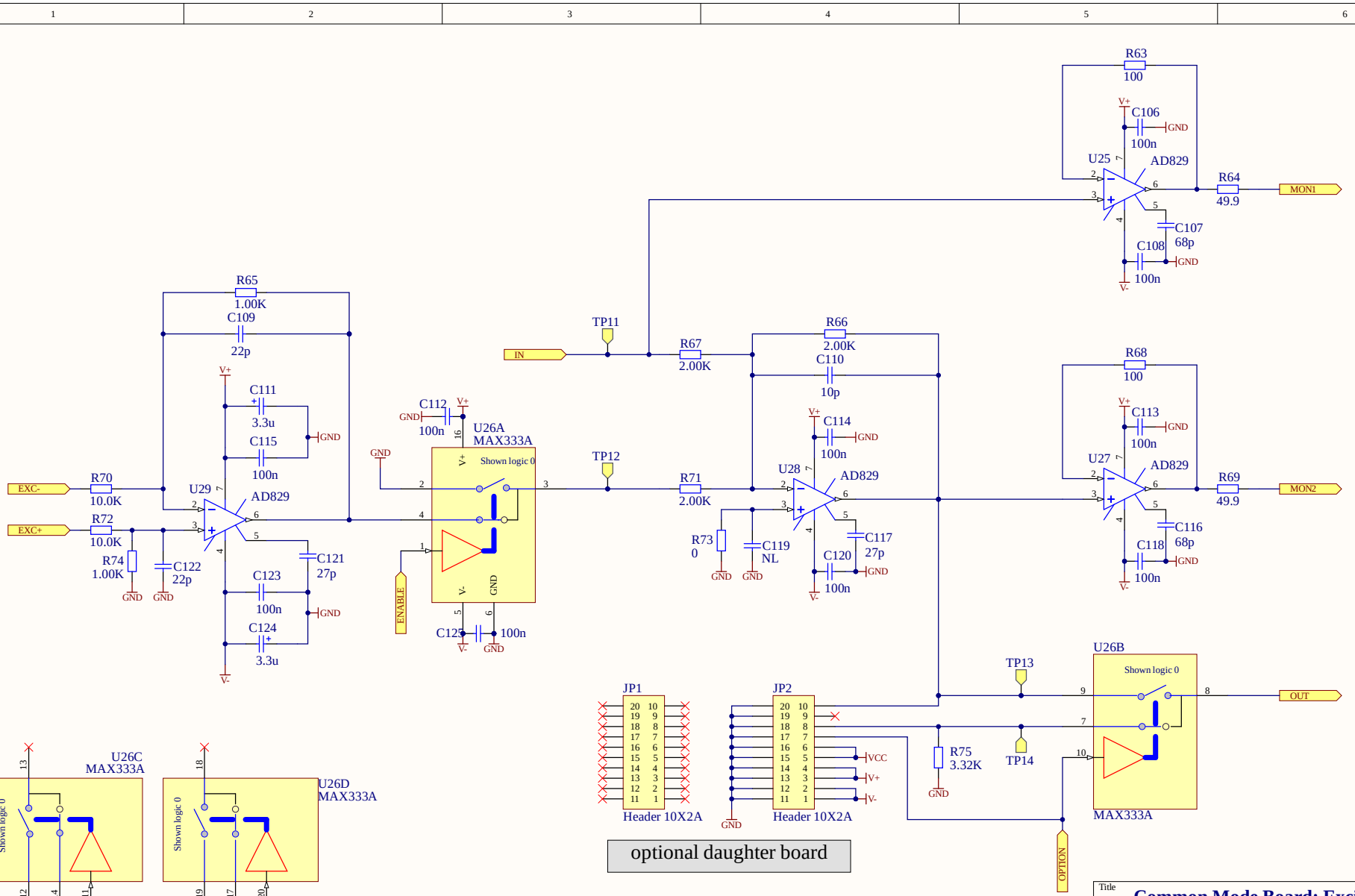

Title	**Common Mode Board: Excitation Point**	
Size: B	Number: T040180-C	Revision: C
Date: 10/07/2024		Sheet 4 of 10
File: C:\Users\..\CM4.SchDoc		Drawn By: Daniel Sigg

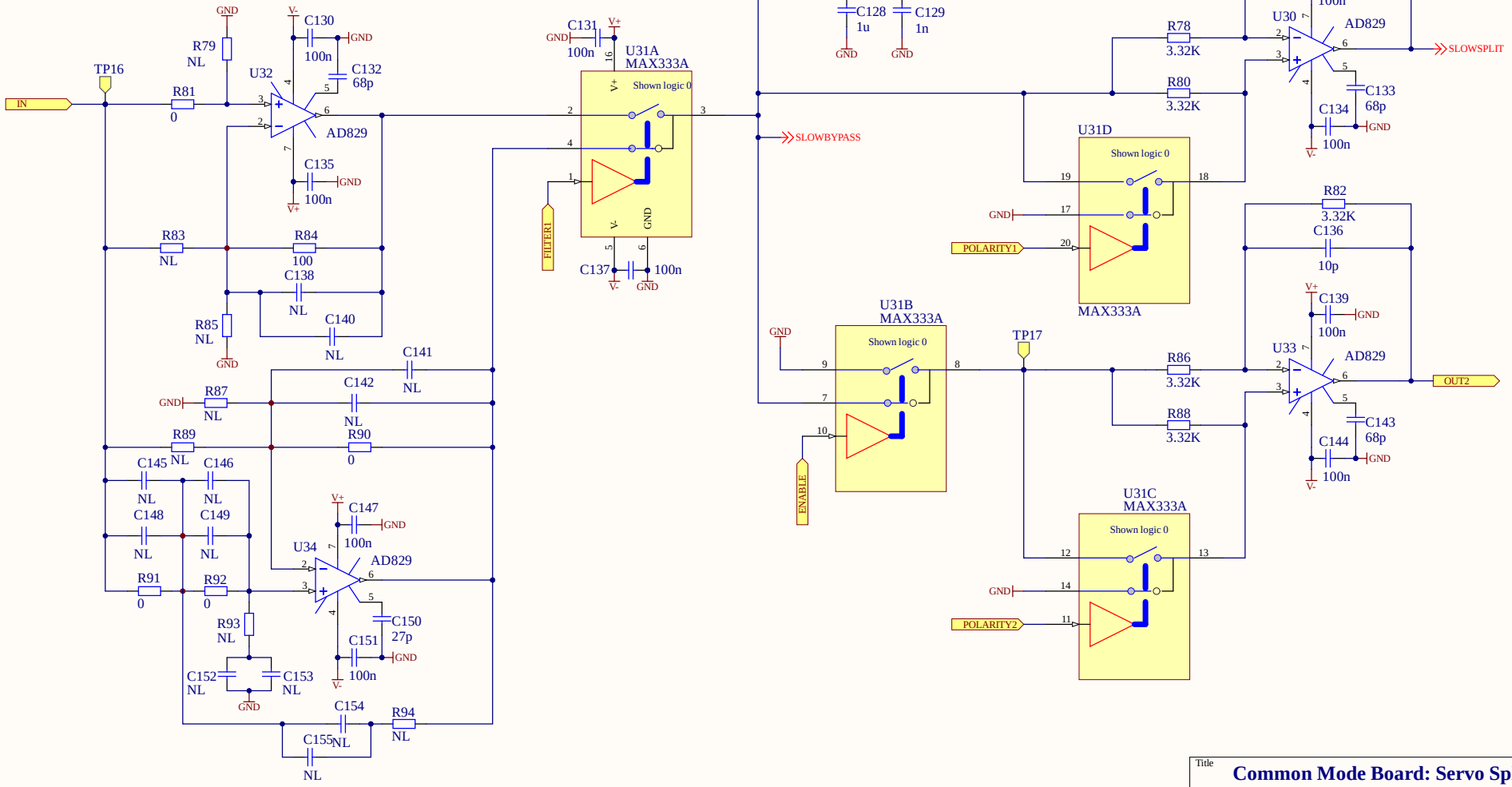

generic filter stage

Title	**Common Mode Board: Servo Split**	
Size: B	Number: T040180	Revision: C
Date: 10/07/2024	Sheet 5 of 10	
File: C:\Users\..\CM5A.SchDoc	Drawn By: Daniel Sigg	

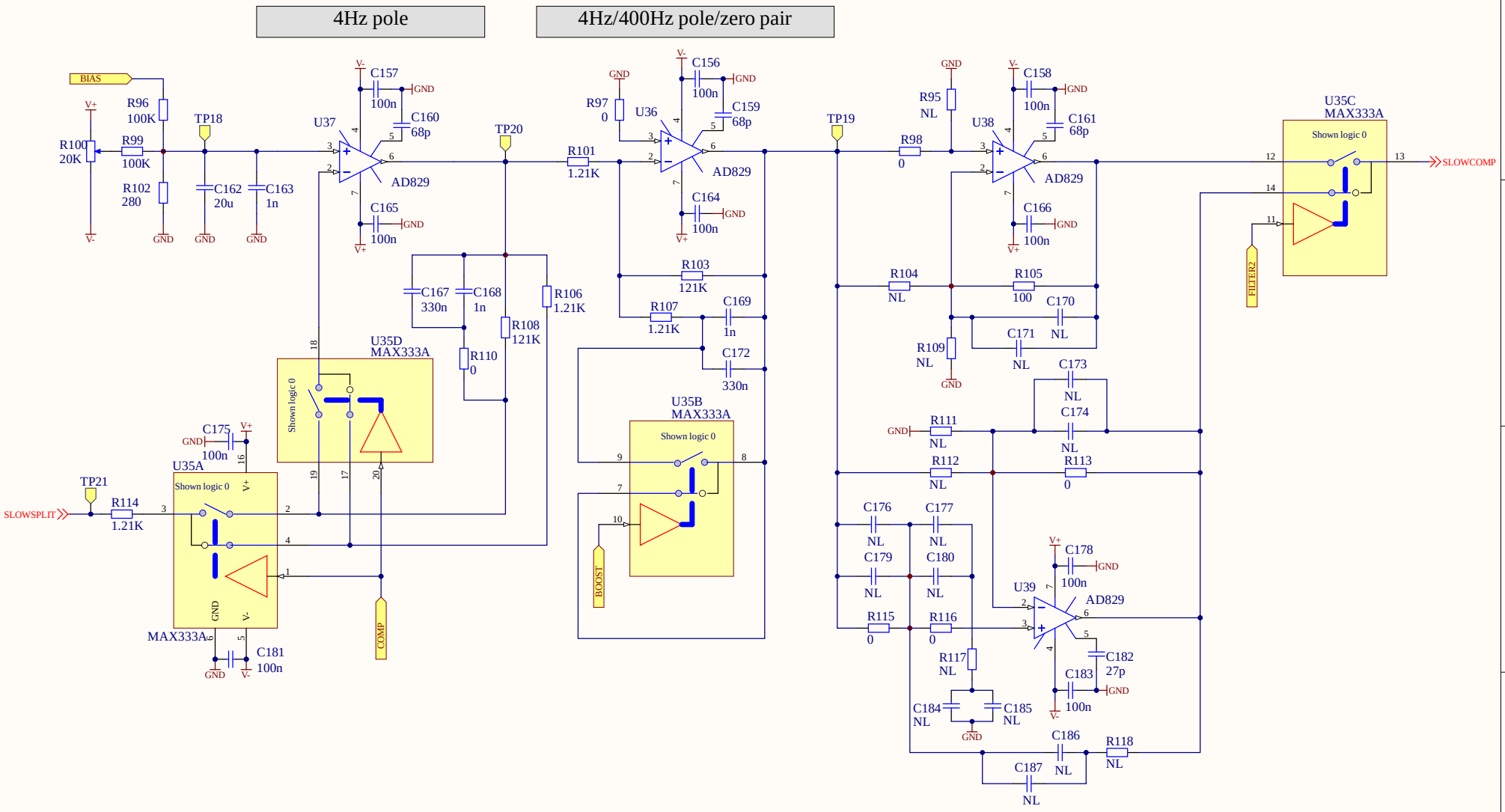
4Hz pole
4Hz/400Hz pole/zero pair
BIAS
R96 100K
R100 20K
R99 100K
R102 280
TP18
C162 20u
C163 1n
U37
AD829
C157 100n
C160 68p
C165 100n
TP20
R101 1.21K
R97 0
U36
C156 100n
C159 68p
C164 100n
TP19
R98 0
R95 NL
U38
C158 100n
C161 68p
C166 100n
U35C MAX333A
Shown logic 0
SLOWCOMP
FILTER2
C167 330n
C168 1n
R106 1.21K
R108 121K
R110 0
U35D MAX333A
R103 121K
R107 1.21K
C169 1n
C172 330n
U35B MAX333A
BOOST
R104 NL
R105 100
C170
C171 NL
R109 NL
C173 NL
C174 NL
R111 NL
R112 NL
R113 0
C175 100n
U35A
TP21
SLOWSPLIT
R114 1.21K
COMP
MAX333A
C181 100n
C176 NL
C177 NL
C179 NL
C180 NL
R115 0
R116 0
U39
AD829
C178 100n
C182 27p
C183 100n
R117 NL
C184 NL
C185 NL
C186 NL
R118 NL
C187 NL
generic filter stage
Title
Common Mode Board: Servo Split
Size B
Number T040180
Revision C
Date: 10/07/2024
Sheet 5 of 10
File: C:\Users\..\CM5B.SchDoc
Drawn By: Daniel Sigg

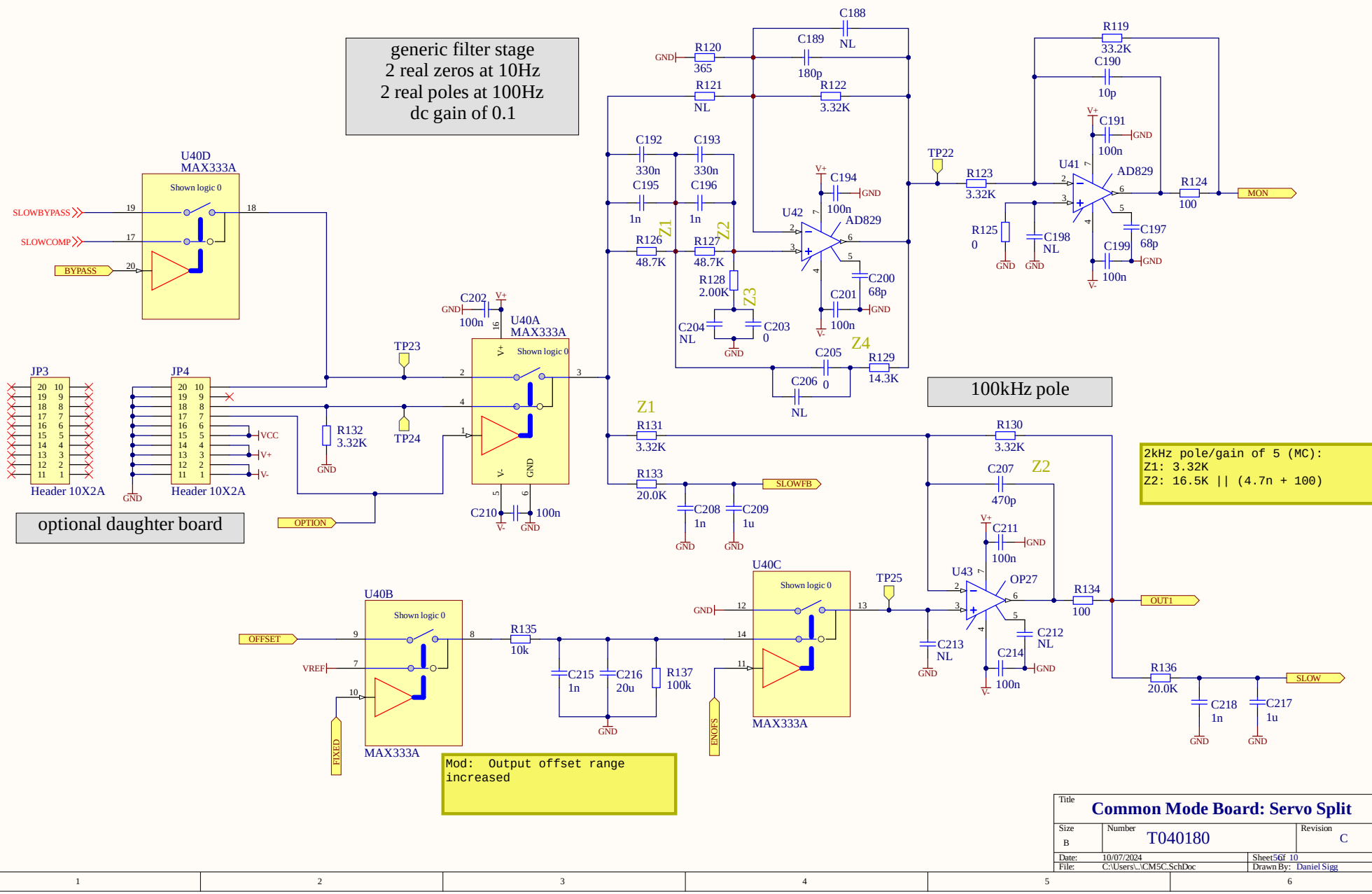

Title	**Common Mode Board: Servo Split**	
Size: B	Number: T040180	Revision: C
Date: 10/07/2024	Sheet 5 of 10	
File: C:\Users\..\CM5C.SchDoc	Drawn By: Daniel Sigg	

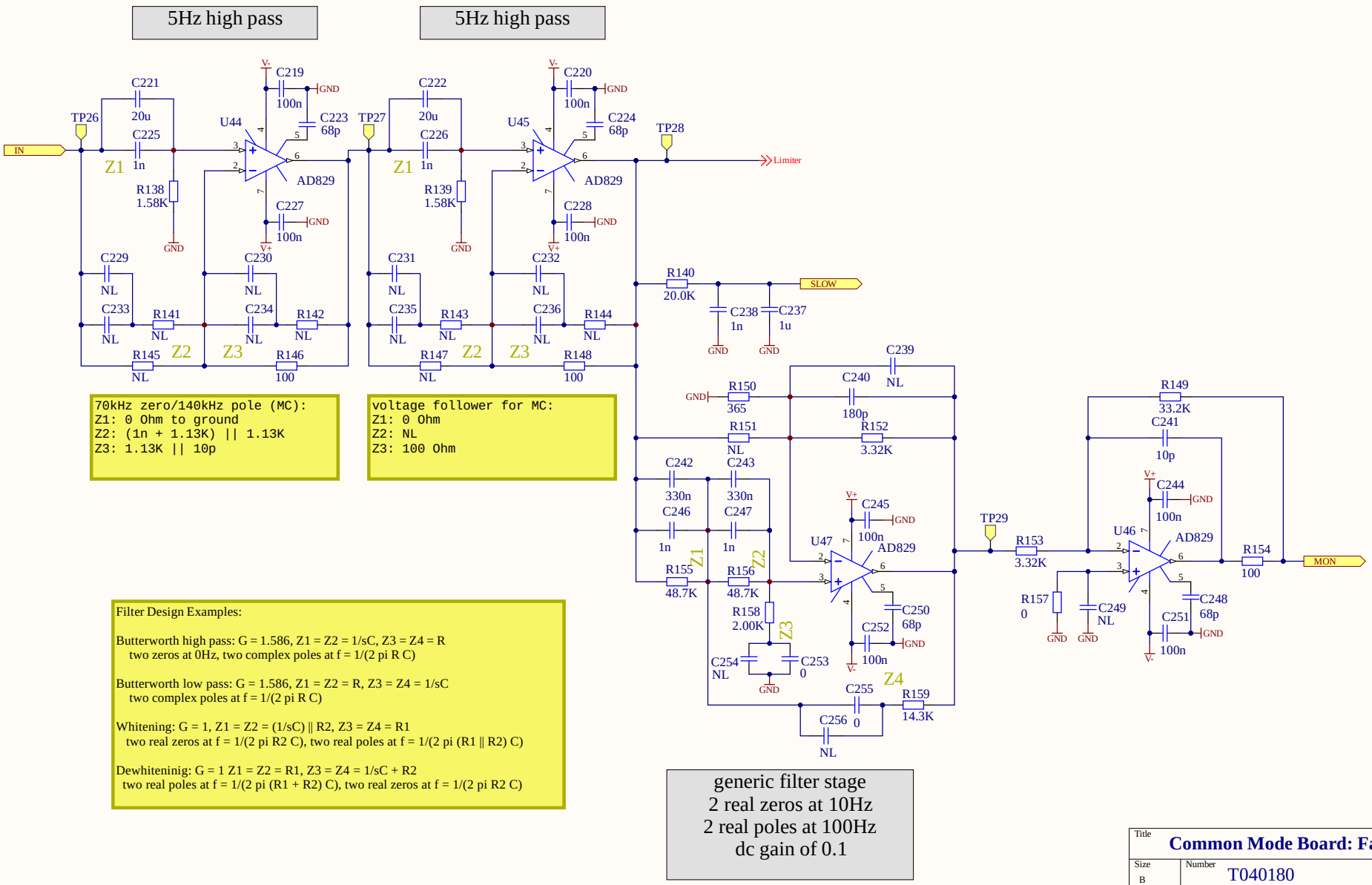
5Hz high pass
5Hz high pass
IN
TP26
TP27
TP28
TP29
Limiter
SLOW
MON
U44
U45
U46
U47
AD829
C219
C220
C221
C222
C223
C224
C225
C226
C227
C228
C229
C230
C231
C232
C233
C234
C235
C236
C237
C238
C239
C240
C241
C242
C243
C244
C245
C246
C247
C248
C249
C250
C251
C252
C253
C254
C255
C256
R138
R139
R140
R141
R142
R143
R144
R145
R146
R147
R148
R149
R150
R151
R152
R153
R154
R155
R156
R157
R158
R159
100n
68p
20u
1n
1.58K
NL
100
20.0K
1u
365
180p
3.32K
33.2K
10p
330n
48.7K
2.00K
14.3K
0
Z1
Z2
Z3
Z4
GND
V-
V+
70kHz zero/140kHz pole (MC):
Z1: 0 Ohm to ground
Z2: (1n + 1.13K) || 1.13K
Z3: 1.13K || 10p
voltage follower for MC:
Z1: 0 Ohm
Z2: NL
Z3: 100 Ohm
Filter Design Examples:
Butterworth high pass: G = 1.586, Z1 = Z2 = 1/sC, Z3 = Z4 = R
two zeros at 0Hz, two complex poles at f = 1/(2 pi R C)
Butterworth low pass: G = 1.586, Z1 = Z2 = R, Z3 = Z4 = 1/sC
two complex poles at f = 1/(2 pi R C)
Whitening: G = 1, Z1 = Z2 = (1/sC) || R2, Z3 = Z4 = R1
two real zeros at f = 1/(2 pi R2 C), two real poles at f = 1/(2 pi (R1 || R2) C)
Dewhiteninig: G = 1 Z1 = Z2 = R1, Z3 = Z4 = 1/sC + R2
two real poles at f = 1/(2 pi (R1 + R2) C), two real zeros at f = 1/(2 pi R2 C)
generic filter stage
2 real zeros at 10Hz
2 real poles at 100Hz
dc gain of 0.1
Title
Common Mode Board: Fast Path
Size
B
Number
T040180
Revision
C
Date:
10/07/2024
File:
C:\Users\..\CM6A.SchDoc
Sheet 6 of 10
Drawn By:
Daniel Sigg

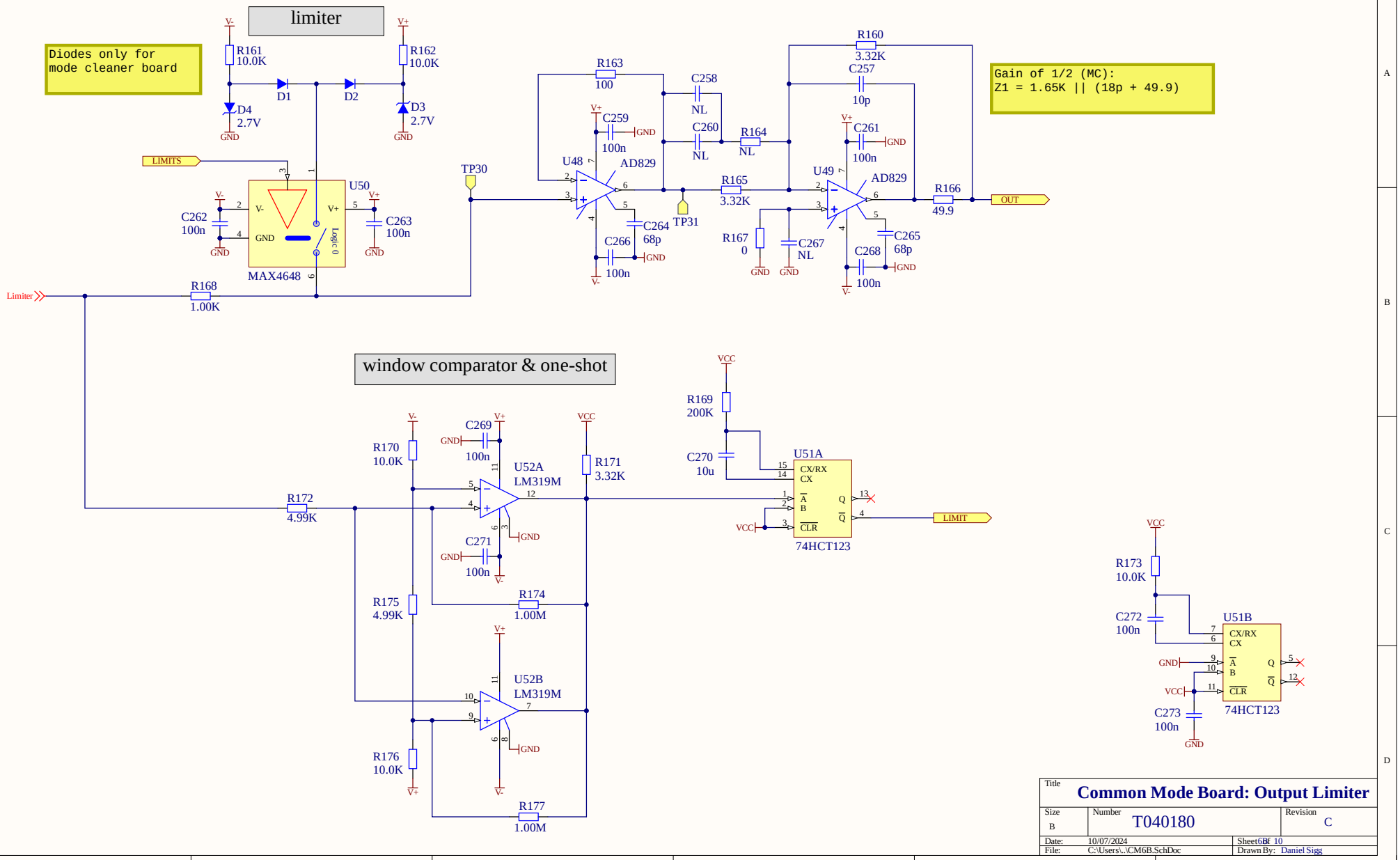
limiter
Diodes only for
mode cleaner board
R161
10.0K
R162
10.0K
D1
D2
D4
2.7V
D3
2.7V
LIMITS
U50
MAX4648
C262
100n
C263
100n
TP30
R168
1.00K
Limiter
R163
100
C258
NL
C259
100n
C260
NL
R164
NL
R160
3.32K
C257
10p
U48
AD829
R165
3.32K
TP31
C264
68p
C266
100n
U49
AD829
C261
100n
R166
49.9
OUT
R167
0
C267
NL
C265
68p
C268
100n
Gain of 1/2 (MC):
Z1 = 1.65K || (18p + 49.9)
window comparator & one-shot
R170
10.0K
C269
100n
U52A
LM319M
R171
3.32K
R172
4.99K
C271
100n
R174
1.00M
R175
4.99K
U52B
LM319M
R176
10.0K
R177
1.00M
R169
200K
C270
10u
U51A
74HCT123
LIMIT
R173
10.0K
C272
100n
U51B
74HCT123
C273
100n
Title
Common Mode Board: Output Limiter
Size
B
Number
T040180
Revision
C
Date:
10/07/2024
File:
C:\Users\..\CM6B.SchDoc
Sheet 6 of 10
Drawn By:
Daniel Sigg

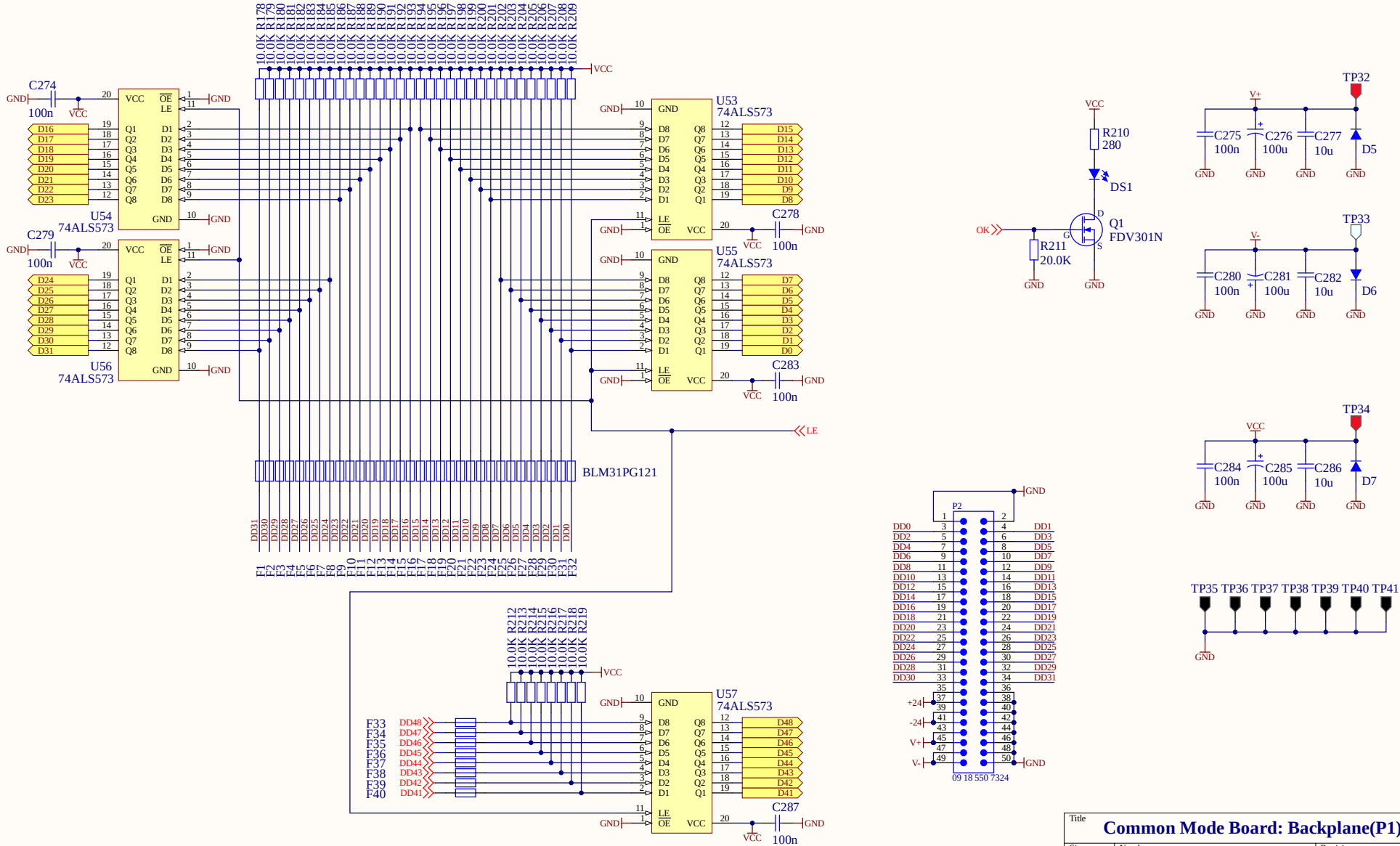

Title	**Common Mode Board: Backplane(P1)**		
Size: B	Number: T040180	Revision: C	
Date: 10/07/2024		Sheet 7 of 10	
File: C:\Users\..\CM7A.SchDoc		Drawn By: Daniel Sigg	

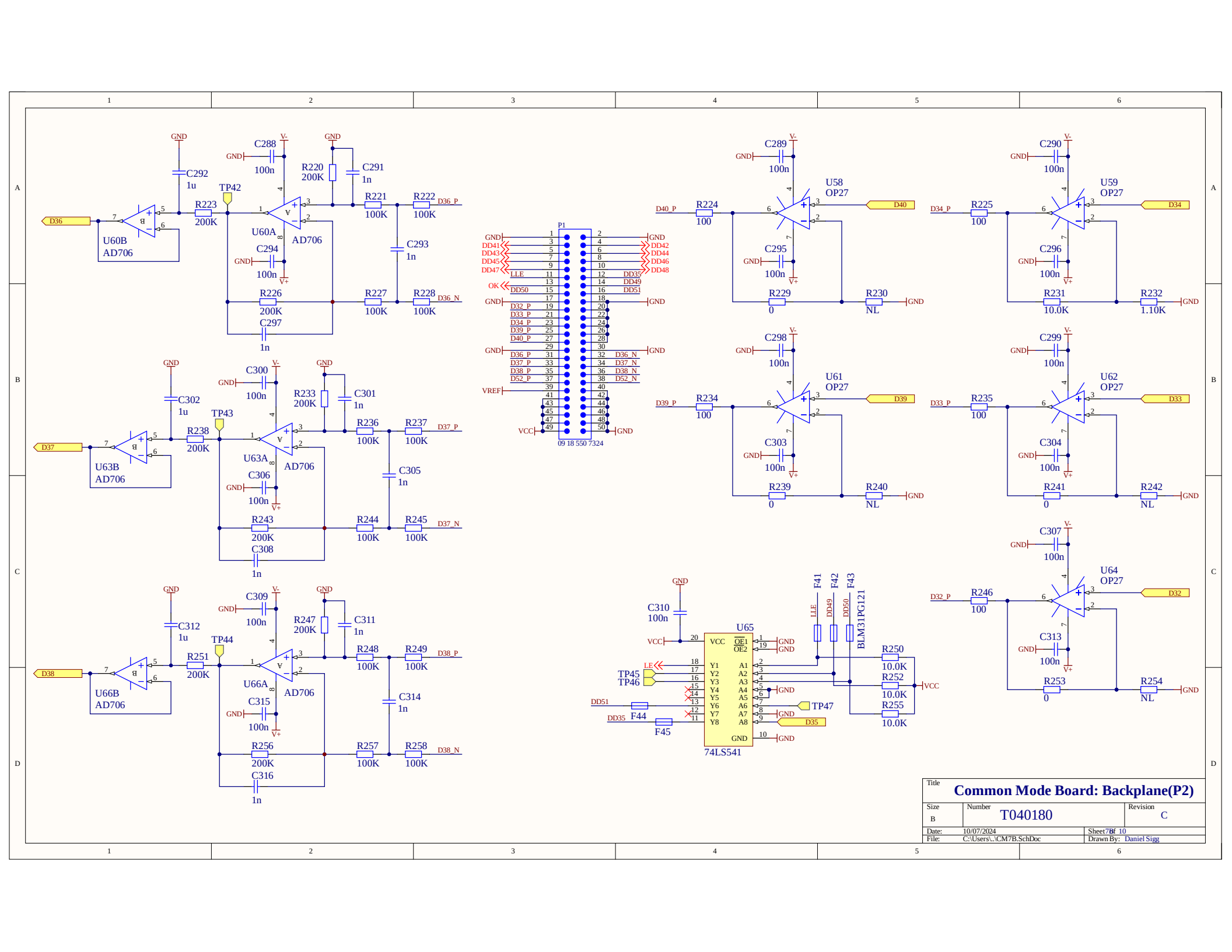
D36
U60B
AD706
C292
1u
R223
200K
TP42
U60A
AD706
C288
100n
C294
100n
R220
200K
C291
1n
R221
100K
R222
100K
D36_P
C293
1n
R226
200K
C297
1n
R227
100K
R228
100K
D36_N
D37
U63B
AD706
C302
1u
R238
200K
TP43
U63A
AD706
C300
100n
C306
100n
R233
200K
C301
1n
R236
100K
R237
100K
D37_P
C305
1n
R243
200K
C308
1n
R244
100K
R245
100K
D37_N
D38
U66B
AD706
C312
1u
R251
200K
TP44
U66A
AD706
C309
100n
C315
100n
R247
200K
C311
1n
R248
100K
R249
100K
D38_P
C314
1n
R256
200K
C316
1n
R257
100K
R258
100K
D38_N
P1
09 18 550 7324
DD41
DD43
DD45
DD47
LLE
OK
DD50
D32_P
D33_P
D34_P
D39_P
D40_P
D36_P
D37_P
D38_P
D52_P
VREF
DD42
DD44
DD46
DD48
DD35
DD49
DD51
D36_N
D37_N
D38_N
D52_N
VCC
D40_P
U58
OP27
C289
100n
C295
100n
R224
100
R229
0
R230
NL
D40
D34_P
U59
OP27
C290
100n
C296
100n
R225
100
R231
10.0K
R232
1.10K
D34
D39_P
U61
OP27
C298
100n
C303
100n
R234
100
R239
0
R240
NL
D39
D33_P
U62
OP27
C299
100n
C304
100n
R235
100
R241
0
R242
NL
D33
D32_P
U64
OP27
C307
100n
C313
100n
R246
100
R253
0
R254
NL
D32
U65
74LS541
C310
100n
TP45
TP46
DD51
DD35
F44
F45
LE
LLE
DD49
DD50
F41
F42
F43
BLM31PG121
R250
10.0K
R252
10.0K
R255
10.0K
TP47
VCC
GND
V-
V+
Title
Common Mode Board: Backplane(P2)
Size
B
Number
T040180
Revision
C
Date:
10/07/2024
File:
C:\Users\..\CM7B.SchDoc
Sheet 7 of 10
Drawn By:
Daniel Sigg

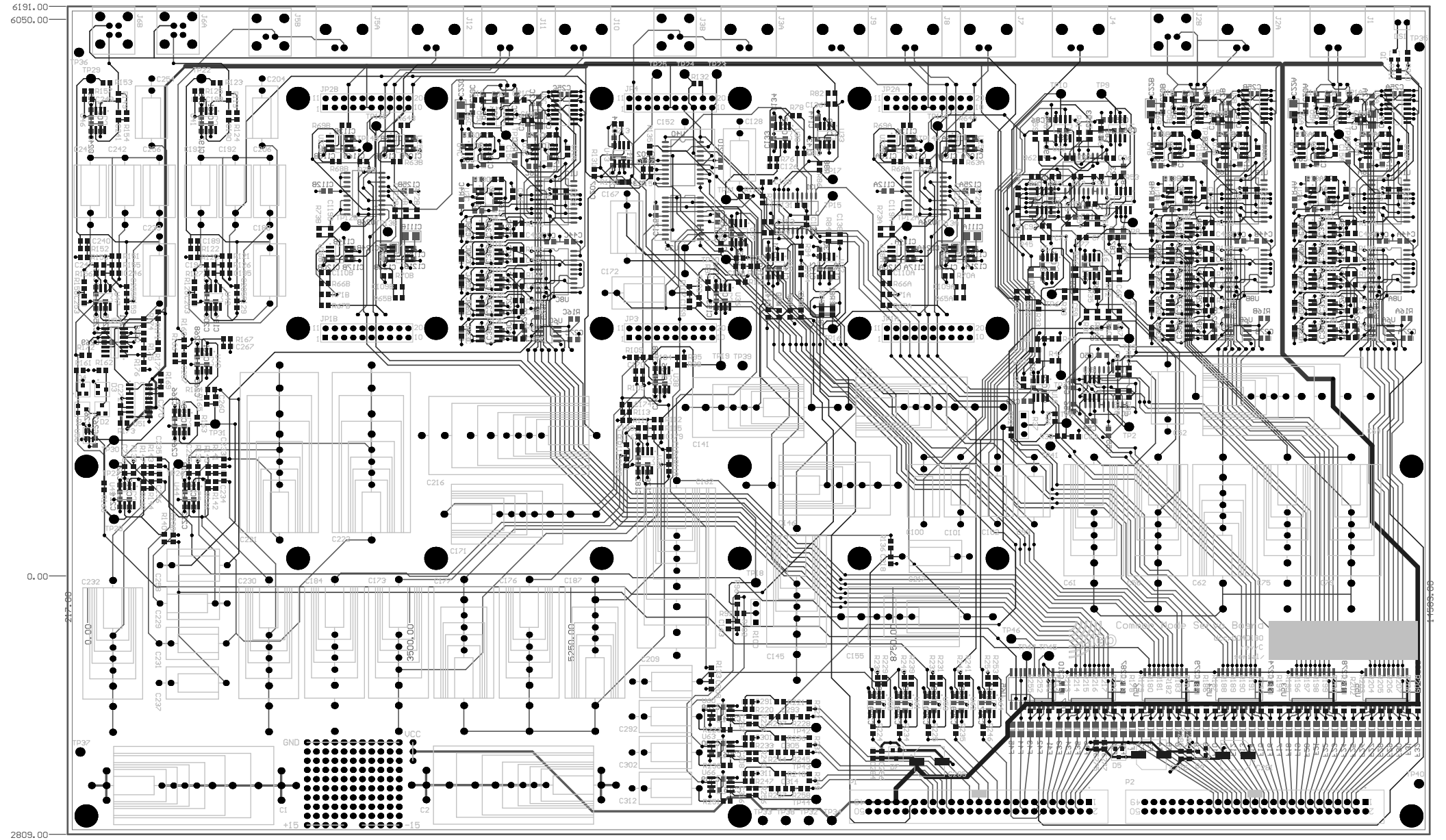
6191.00
6050.00
0.00
2809.00
217.00
11569.00
3500.00
5250.00
8750.00
GND
VCC
+15
-15
Common Mode Servo Board

Quantity	Part Number	Distributor	Description	Comment	Designator	Footprint	Assembly Type
97		None	Film Capacitor, axial lead, Capacitor, Resistor	NL	C1, C2, C58, C59, C61, C62, C67, C68, C72, C75, C76, C77, C79, C81, C119A, C119B, C138, C140, C141, C142, C145, C146, C148, C149, C152, C153, C154, C155, C170, C171, C173, C174, C176, C177, C179, C180, C184, C185, C186, C187, C188, C198, C204, C206, C212, C213, C229, C230, C231, C232, C233, C234, C235, C236, C239, C249, C254, C256, C258, C260, C267, R3A, R3B, R3C, R7A, R7B, R7C, R34, R44, R46, R79, R83, R85, R87, R89, R93, R94, R95, R104, R109, R111, R112, R117, R118, R121, R141, R142, R143, R144, R145, R147, R151, R164, R230, R240, R242, R254	CA-ALL8, CA-ALL6, CC2013-0805, CA117065, CA-ALL2, CR2012-0805	TH, [NoValue]
16	PCC100CNCT-ND	Digi-Key	Capacitor	10p	C3A, C3B, C3C, C21A, C21B, C21C, C51, C60, C74, C110A, C110B, C126, C136, C190, C241, C257	CC2013-0805	
187	478-1395-1-ND	Digi-Key	Capacitor	100n	C4A, C4B, C4C, C5A, C5B, C5C, C6A, C6B, C6C, C8A, C8B, C8C, C14A, C14B, C14C, C16A, C16B, C16C, C17A, C17B, C17C, C19A, C19B, C19C, C20A, C20B, C20C, C23A, C23B, C23C, C24A, C24B, C24C, C25A, C25B, C25C, C27A, C27B, C27C, C28A, C28B, C28C, C29A, C29B, C29C, C30A, C30B, C30C, C31A, C31B, C31C, C32A, C32B, C32C, C33A, C33B, C33C, C39A, C39B, C39C, C40A, C40B, C40C, C41A, C41B, C41C, C42A, C42B, C42C, C43A, C43B, C43C, C44A, C44B, C44C, C50, C54, C55, C57, C65, C66, C71, C73, C78, C82, C83, C84, C85, C86, C91, C92, C93, C94, C103, C104, C105, C106A, C106B, C108A, C108B, C112A, C112B, C113A, C113B, C114A, C114B, C115A, C115B, C118A, C118B, C120A, C120B, C123A, C123B, C125A, C125B, C127, C130, C131, C134, C135, C137, C139, C144, C147, C151, C156, C157, C158, C164, C165, C166, C175, C178, C181, C183, C191, C194, C199, C201, C202, C210, C211, C214, C219, C220, C227, C228, C244, C245, C251, C252, C259, C261, C262, C263, C266, C268, C269, C271, C272, C273, C274, C275, C278, C279, C280, C282, C284	CC2013-0805	
10	399-3836-1-ND	Digi-Key	Polarized Capacitor (Surface Mount)	3.3u	C7A, C7B, C7C, C22A, C22B, C22C, C111A, C111B, C124A, C124B	TC3528-1411	
42	PCC680CGCT-ND	Digi-Key	Capacitor	68p	C9A, C9B, C9C, C11A, C11B, C11C, C12A, C12B, C12C, C15A, C15B, C15C, C26A, C26B, C26C, C38A, C38B, C38C, C69, C70, C87, C88, C89, C90, C107A, C107B, C116A, C116B, C132, C133, C143, C159, C160, C161, C197, C200, C223, C224, C248, C250, C264, C265	CC2013-0805	
10	PCC220CGCT-ND	Digi-Key	Capacitor	22p	C10A, C10B, C10C, C13A, C13B, C13C, C109A, C109B, C122A, C122B	CC2013-0805	
11	PCC270CGCT-ND	Digi-Key	Capacitor	27p	C18A, C18B, C18C, C56, C80, C117A, C117B, C121A, C121B, C150, C182	CC2013-0805	
3	478-1300-1-ND	Digi-Key	Capacitor	4.7p	C34A, C34B, C34C	CC2013-0805	
3	PCC180CGCT-ND	Digi-Key	Capacitor	18p	C35A, C35B, C35C	CC2013-0805	
6	PCC330CGCT-ND	Digi-Key	Capacitor	33p	C36A, C36B, C36C, C47A, C47B, C47C	CC2013-0805	
3	PCC470CGCT-ND	Digi-Key	Capacitor	47p	C37A, C37B, C37C	CC2013-0805	
3	PCC181CGCT-ND	Digi-Key	Capacitor	180p	C45A, C45B, C45C	CC2013-0805	
6	PCC150CNCT-ND	Digi-Key	Capacitor	15p	C46A, C46B, C46C, C49A, C49B, C49C	CC2013-0805	
3	PCC101CGCT-ND	Digi-Key	Capacitor	100p	C48A, C48B, C48C	CC2013-0805	
8	MCO2B105F	Electronics Concepts	Film Capacitor, axial lead	1u	C52, C128, C209, C217, C237, C292, C302, C312	CA-ALL2	TH
29	PCC102CGCT-ND	Digi-Key	Capacitor	1n	C53, C63, C95, C96, C97, C98, C129, C163, C168, C169, C195, C196, C208, C215, C218, C225, C226, C238, C246, C247, C291, C293, C297, C301, C305, C308, C311, C314, C316	CC2013-0805	
5	MCO2B206F	Electronics Concepts	Film Capacitor, axial lead	20u	C64, C162, C216, C221, C222	CA-ALL8	TH
3	MCO2B104F	Electronics Concepts	Film Capacitor, axial lead	1u	C99, C100, C101	CA-ALL2	TH
1	MCO2B333F	Electronics Concepts	Film Capacitor, axial lead	1u	C102	CA-ALL2	TH
6	MCO2B334F	Electronics Concepts	Film Capacitor, axial lead	330n	C167, C172, C192, C193, C242, C243	CA-ALL2	TH
2	PCC221CGCT-ND	Digi-Key	Capacitor	180p	C189, C240	CC2013-0805	
28	311-0.0ARCT-ND	Digi-Key	Capacitor, Resistor	0	C203, C205, C253, C255, R40, R42, R45, R49, R50, R73A, R73B, R81, R90, R91, R92, R97, R98, R110, R113, R115, R116, R125, R157, R167, R229, R239, R241, R253	CC2013-0805, CR2012-0805	
1	PCC471CGCT-ND	Digi-Key	Capacitor	470p	C207	CC2013-0805	
4	490-1709-1-ND	Digi-Key	Capacitor	10u	C270, C277, C282, C286	CC2013-0805	
3	493-2290-1-ND	Digi-Key	Electrolyte capacitor, surface mount	100u	C276, C281, C285	AC083-033/F	
5	BAS16FSCT-ND	Digi-Key	Single diode in SOT23 package	BAS16	D1, D2, D5, D6, D7	SO-G3/C2.25	
2	BZX84C12-FDICT-ND	Digi-Key	Single zener diode in SOT23 package	Zener diode	D3, D4	SO-G3/C2.25	
1	67-1218-ND	Digi-Key	Panel mount LED	LED	DS1	LED-1	TH
45	490-1056-1-ND	Digi-Key	ferrite bead, 120Ohm at 100MHz, 1206	BLM31PG121	F1, F2, F3, F4, F5, F6, F7, F8, F9, F10, F11, F12, F13, F14, F15, F16, F17, F18, F19, F20, F21, F22, F23, F24, F25, F26, F27, F28, F29, F30, F31, F32, F33, F34, F35, F36, F37, F38, F39, F40, F41, F42, F43, F44, F45	CC3216-1206	
5	97F8565	Newark	TNC Elbow Connector	IN1, IN2, OUT 1, OUT2, SERVO	J1, J2A, J3A, J4, J5A	BNC1	TH
3	736-EPG0B302HLN	Mouser	2-pin LEMO connector	EPG.0B.302.HLN	J2B, J3B, J5B	LEMO2	TH
2	736-EPG1B304HLN	Mouser	LEMO RA 4 pin PCB connector	DAQ 1, DAQ 2	J6A, J6B	LEMO_4PIN	TH
6	A32258-ND	Digi-Key	BNC, PCB Mount, Right Angle	A IN1, A EXC, A IN2, B IN1, B EXC, B IN2	J7, J8, J9, J10, J11, J12	BNC1	TH
6	S6106-ND	Digi-Key	Header, 10-Pin, Dual row	Header 10X2A	JP1A, JP1B, JP2A, JP2B, JP3, JP4	HDR2X10_CEN	TH
2	A31174-ND	Digi-Key	Flat Cable Connector (IDC), Low-Profile Male Header, Straight Solder Pin, 50 Contacts, Performance Level 3	09 18 550 7324	P1, P2	918550x324	TH
1	FDV301NCT-ND	Digi-Key	FDV301N, Digital FET, N-channel, SOT23	FDV301N	Q1	SO-G3/C2.25	
26	RG20P2.0KBCT-ND	Digi-Key	Resistor	2.00K	R1A, R1B, R1C, R2A, R2B, R2C, R4A, R4B, R4C, R11A, R11B, R11C, R12A, R12B, R12C, R27, R28, R30, R66A, R66B, R67A, R67B, R71A, R71B, R128, R158	CR2012-0805	
12	RG20P1.5KBCT-ND	Digi-Key	Resistor	1.50K	R5A, R5B, R5C, R6A, R6B, R6C, R17A, R17B, R17C, R18A, R18B, R18C	CR2012-0805	
3	RG20P374BCT-ND	Digi-Key	Resistor	374	R8A, R8B, R8C	CR2012-0805	
23	RG20P1.0KBCT-ND	Digi-Key	Resistor	1.00K	R9A, R9B, R9C, R10A, R10B, R10C, R22A, R22B, R22C, R23A, R23B, R23C, R25A, R25B, R25C, R26A, R26B, R26C, R65A, R65B, R74A, R74B, R168	CR2012-0805	
32	RG20P100BCT-ND	Digi-Key	Resistor	100	R13A, R13B, R13C, R14A, R14B, R14C, R15A, R15B, R15C, R16A, R16B, R16C, R31, R41, R48, R63A, R63B, R68A, R68B, R84, R105, R124, R134, R146, R148, R154, R163, R224, R225, R234, R235, R246	CR2012-0805	
3	RR12P590DCT-ND	Digi-Key	Resistor	590	R19A, R19B, R19C	CR2012-0805	
3	RR12P255DCT-ND	Digi-Key	Resistor	255	R20A, R20B, R20C	CR2012-0805	
3	RR12P121DCT-ND	Digi-Key	Resistor	121	R21A, R21B, R21C	CR2012-0805	
6	RR12P280DCT-ND	Digi-Key	Resistor, Resistor, surface mount	280	R24A, R24B, R24C, R38, R102, R210	CR2012-0805	
6	RG20P20.0KBCT-ND	Digi-Key	Resistor	20.0K	R29, R77, R133, R136, R140, R211	CR2012-0805	
16	RG20P100KBCT-ND	Digi-Key	Resistor	100K	R32, R36, R96, R99, R221, R222, R227, R228, R236, R237, R244, R245, R248, R249, R257, R258	CR2012-0805	
22	RG20P3.32KBCT-ND	Digi-Key	Resistor	3.32K	R33, R39, R43, R47, R75A, R75B, R76, R78, R80, R82, R86, R88, R122, R123, R130, R131, R132, R152, R153, R160, R165, R171	CR2012-0805	
55	RG20P10.0KBCT-ND	Digi-Key	Resistor	10.0K, 100k	R35, R70A, R70B, R72A, R72B, R137, R161, R162, R170, R173, R176, R178, R179, R180, R181, R182, R183, R184, R185, R186, R187, R188, R189, R190, R191, R192, R193, R194, R195, R196, R197, R198, R199, R200, R201, R202, R203, R204, R205, R206, R207, R208, R209, R212, R213, R214, R215, R216, R217, R218, R219, R231, R250, R252, R255	CR2012-0805	
2	3296W-203-ND	Digi-Key	Potentiometer	20K	R37, R100	HDR1X3	
6	RG20P1.21KBCT-ND	Digi-Key	Resistor	1.58k, 1.21K	R51, R53, R101, R106, R107, R114	CR2012-0805	
3	RR12P121KDCT-ND	Digi-Key	Resistor	158k, 121K	R52, R103, R108	CR2012-0805	
6	RR12P1.58KDCT-ND	Digi-Key	Resistor	1.58K, 45.3k	R54, R55, R56, R57, R138, R139	CR2012-0805	
2	RR12P3.16KDCT-ND	Digi-Key	Resistor	3.16K, 45.3k	R58, R59	CR2012-0805	
2	RR12Q82.5DCT-ND	Digi-Key	Resistor	2.49k	R60, R61	CR2012-0805	
1	RR12P165DCT-ND	Digi-Key	Resistor	2.49k	R62	CR2012-0805	
5	RR12Q49.9DCT-ND	Digi-Key	Resistor	49.9	R64A, R64B, R69A, R69B, R166	CR2012-0805	
2	RG20P33.2KBCT-ND	Digi-Key	Resistor	33.2K	R119, R149	CR2012-0805	
2	RR12P365DCT-ND	Digi-Key	Resistor	365	R120, R150	CR2012-0805	
4	RG20P48.7KBCT-ND	Digi-Key	Resistor	48.7K	R126, R127, R155, R156	CR2012-0805	
2	RG20P14.3KBCT-ND	Digi-Key	Resistor	14.3K	R129, R159	CR2012-0805	
1	RG20P30.0KBCT-ND	Digi-Key	Resistor	10k	R135	CR2012-0805	
10	RG20P200KBCT-ND	Digi-Key	Resistor	200K	R169, R220, R223, R226, R233, R238, R243, R247, R251, R256	CR2012-0805	
2	RG20P4.99KBCT-ND	Digi-Key	Resistor	4.99K	R172, R175	CR2012-0805	
2	RG20P1.0MBCT-ND	Digi-Key	Resistor	1.00M	R174, R177	CR2012-0805	
1	RG20P1.10KBCT-ND	Digi-Key	Resistor	1.10K	R232	CR2012-0805	
42	5009K-ND	Digi-Key	Testpoint, yellow	Testpoint	TP1A, TP1B, TP1C, TP2, TP3, TP4, TP5, TP6, TP7, TP8, TP9, TP10, TP11A, TP11B, TP12A, TP12B, TP13A, TP13B, TP14A, TP14B, TP15, TP16, TP17, TP18, TP19, TP20, TP21, TP22, TP23, TP24, TP26, TP27, TP28, TP29, TP30, TP31, TP42, TP43, TP44, TP45, TP46, TP47	TP1	TH
1	5009K-ND		Testpoint, yellow	Testpoint	TP25	TP1	TH
2	5005K-ND	Digi-Key	Testpoint, red	Testpoint	TP32, TP34	TP1	TH
1	5007K-ND	Digi-Key	Testpoint, white	Testpoint	TP33	TP1	TH
7	5006K-ND	Digi-Key	Testpoint, black	Testpoint	TP35, TP36, TP37, TP38, TP39, TP40, TP41	TP1	TH
13	MAX333ACWP+-ND	Digi-Key	Quad Switch	MAX333A	U1A, U1B, U1C, U8A, U8B, U8C, U14, U23, U26A, U26B, U31, U35, U40	SOL-20	
62	AD829ARZ-ND	Digi-Key	Video Operational Amplifier	AD829	U2A, U2B, U2C, U3A, U3B, U3C, U4A, U4B, U4C, U5A, U5B, U5C, U6A, U6B, U6C, U9A, U9B, U9C, U10A, U10B, U10C, U11A, U11B, U11C, U12A, U12B, U12C, U13A, U13B, U13C, U15, U16, U17, U18, U19, U20, U21, U22, U25A, U25B, U27A, U27B, U28A, U28B, U29A, U29B, U30, U32, U33, U34, U36, U37, U38, U39, U41, U42, U44, U45, U46, U47, U48, U49	SO-G8	
4	74ACT157SC-ND	Digi-Key	Quadruple 2-Line to 1-Line Data Selector/Multiplexer	74ACT157	U7A, U7B, U7C, U24	SO-G16/D10	
6	OP27GSZ-ND	Digi-Key	Low Noise Operational Amplifier	OP27	U43, U58, U59, U61, U62, U64	SO-G8	
1	MAX4648EUT+TCT-ND	Digi-Key	Single SPST analog switch, NO	MAX4648	U50	SO-G6/P1	
1	296-9250-5-ND	Digi-Key	Retriggerable Monostable Multivibrator	74HCT123	U51	SO-G16/D10	
1	LM319AM-ND	Digi-Key	High-Speed Dual Comparator	LM319M	U52	SO-G14/E2	
5	296-1129-5-ND	Digi-Key	Octal D-Type Transparent Latches with 3-State Outputs	74ALS573	U53, U54, U55, U56, U57	DW020	
3	AD706ARZ-ND	Digi-Key	Dual Picoampere Input Current Bipolar Operational Amplifier	AD706	U60, U63, U66	SO-G8	
1	296-14742-1-ND	Digi-Key	Octal Buffer/Driver with 3-State Outputs	74LS541	U65	SO-G20/G7.1	