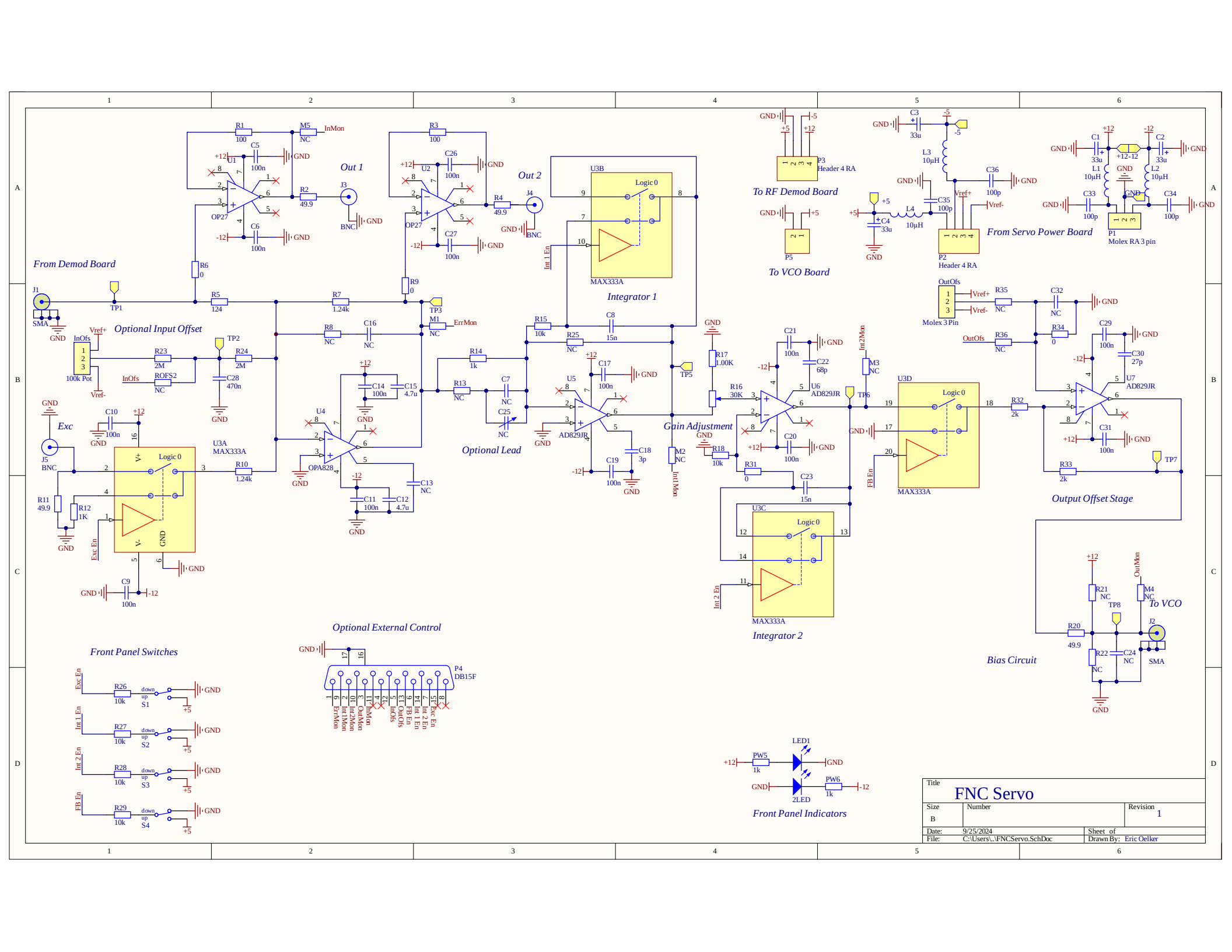
From Demod Board
Optional Input Offset
Out 1
Out 2
Integrator 1
To RF Demod Board
To VCO Board
From Servo Power Board
Molex RA 3 pin
Molex 3 Pin
Exc
Optional Lead
Gain Adjustment
Output Offset Stage
Front Panel Switches
Optional External Control
Integrator 2
Bias Circuit
To VCO
Front Panel Indicators
Title
FNC Servo
Size
B
Number
Revision
1
Date: 9/25/2024
File: C:\Users\..\FNCServo.SchDoc
Sheet of
Drawn By: Eric Oelker

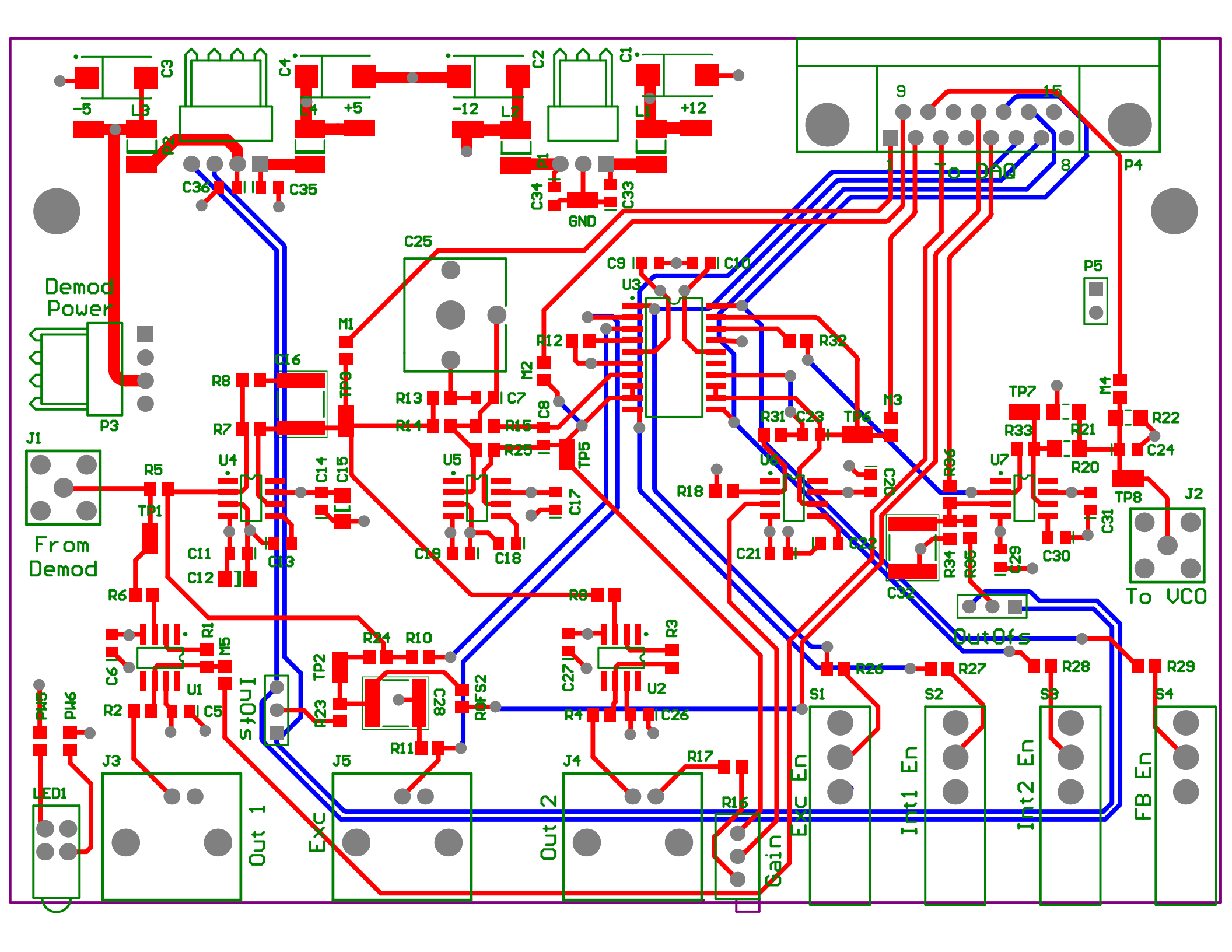

Demod Power
From Demod
To DAQ
To VCO
OutOfs
InOfs
Out 1
Exc
Out 2
Gain
Exc En
Int1 En
Int2 En
FB En
GND
-5
+5
-12
+12
C1
C2
C3
C4
C25
C36
C35
C34
C33
C9
C10
U3
P4
P5
P3
J1
J2
J3
J4
J5
S1
S2
S3
S4
LED1
M1
M2
M3
M4
M5
R1
R2
R3
R4
R5
R6
R7
R8
R9
R10
R11
R12
R13
R14
R15
R16
R17
R18
R20
R21
R22
R23
R24
R25
R26
R27
R28
R29
R31
R32
R33
R34
R35
R36
C5
C6
C7
C8
C11
C12
C13
C14
C15
C16
C17
C18
C19
C20
C21
C22
C23
C24
C26
C27
C28
C29
C30
C31
C32
TP1
TP2
TP3
TP5
TP6
TP7
TP8
U1
U2
U4
U5
U6
U7

Comment	Description	Designator	Footprint	LibRef	Quantity
Testpoint	Testpoint	-5, -12, +5, +12, GND, TP1, TP2, TP3, TP5, TP6, TP7, TP8	TP2	TP	12
33u	Tantalum capacitor, surface mount	C1, C2, C3, C4	TC7343-2917	ChipTantalum	4
100n	Capacitor, surface mount	C5, C6, C9, C10, C11, C14, C17, C19, C20, C21, C26, C27, C29, C31	CC2013-0805	ChipCap	14
NC	Capacitor, surface mount	C7, C13, C24	CC2013-0805	ChipCap	3
15n	Capacitor, surface mount	C8, C23	CC2013-0805	ChipCap	2
4.7u	Capacitor, surface mount	C12, C15	CC3216-1206	ChipCap	2
NC	Capacitor, surface mount	C16, C32	CC5650-2220	ChipCap	2
3p	Capacitor, surface mount	C18	CC2013-0805	ChipCap	1
68p	Capacitor, surface mount	C22	CC2013-0805	ChipCap	1
NC	Plastic dielectric trimmer capacitors	C25	VC10TOPBOTTOM	CapTrimSG	1
470n	Capacitor, surface mount	C28	CC5650-2220	ChipCap	1
27p	Capacitor, surface mount	C30	CC2013-0805	ChipCap	1
100p	Capacitor, surface mount	C33, C34, C35, C36	CC2013-0805	ChipCap	4
100k Pot		InOfs	HDR1X3	MOLEX_100_RA_3	1
SMA	SMA Connector	J1, J2	SMA	SMA	2
BNC	BNC, PCB Mount, Right Angle	J3, J4, J5	BNC2	BNC	3
10µH	10UH, 360mA 10 @2.252 MHZ	L1, L2, L3, L4	CL4532-1812	INDUCTOR	4
2LED		LED1	2LED	2LED	1
NC	Resistor, surface mount	M1, M2, M3, M4, M5, R8, R13, R25, R35, R36, ROFS2	CR2012-0805	ChipRes1	11
Molex 3 Pin		OutOfs	HDR1X3	MOLEX_100_RA_3	1
Molex RA 3 pin		P1	MOLEX_100_RA_3	MOLEX_100_RA_3	1
Header 4 RA	Header, 4-Pin	P2, P3	MOLEX_100_RA_4	Header 4	2
DB15F	Receptacle Assembly, 15 Position, Right Angle, .318 Series	P4	DB15F-RA	DB15F	1
TBlock_5.08_2	Terminal block, 5.08mm, 2-Pin	P5	TBLOCK-5.08-2	TBlock_5.08_2	1
1k	Resistor, surface mount	PW5, PW6, R12, R14	CR2012-0805	ChipRes1	4
100	Resistor, surface mount	R1, R3	CR2012-0805	ChipRes1	2
49.9	Resistor, surface mount	R2, R4, R11	CR2012-0805	ChipRes1	3
124	Resistor, surface mount	R5	CR2012-0805	ChipRes1	1
0	Resistor, surface mount	R6, R9, R31, R34	CR2012-0805	ChipRes1	4
1.24k	Resistor, surface mount	R7, R10	CR2012-0805	ChipRes1	2
10k	Resistor, surface mount	R15, R18, R26, R27, R28, R29	CR2012-0805	ChipRes1	6
30K	Potentiometer	R16	POT3296X	ResPot	1
1.00K	Resistor, surface mount	R17	CR2012-0805	ChipRes1	1
49.9	Resistor, surface mount	R20	CR3216-1206	ChipRes1	1
NC	Resistor, surface mount	R21, R22	CR3216-1206	ChipRes1	2
2M	Resistor, surface mount	R23, R24	CR2012-0805	ChipRes1	2
2k	Resistor, surface mount	R32, R33	CR2012-0805	ChipRes1	2
101	Switch, SPDT, PCB right-angle	S1, S2, S3, S4	SW-7103	SW_101	4
OP27	High-Speed, Low-Noise Video Operational Amplifier	U1, U2	SO-G8	AD829JR	2
MAX333A	Quad SPDT analog switch	U3	SO-G20	MAX333A	1
OPA828	High-Speed, Low-Noise Video Operational Amplifier	U4	SO-G8	AD829JR	1
AD829JR	High-Speed, Low-Noise Video Operational Amplifier	U5, U6, U7	SO-G8	AD829JR	3