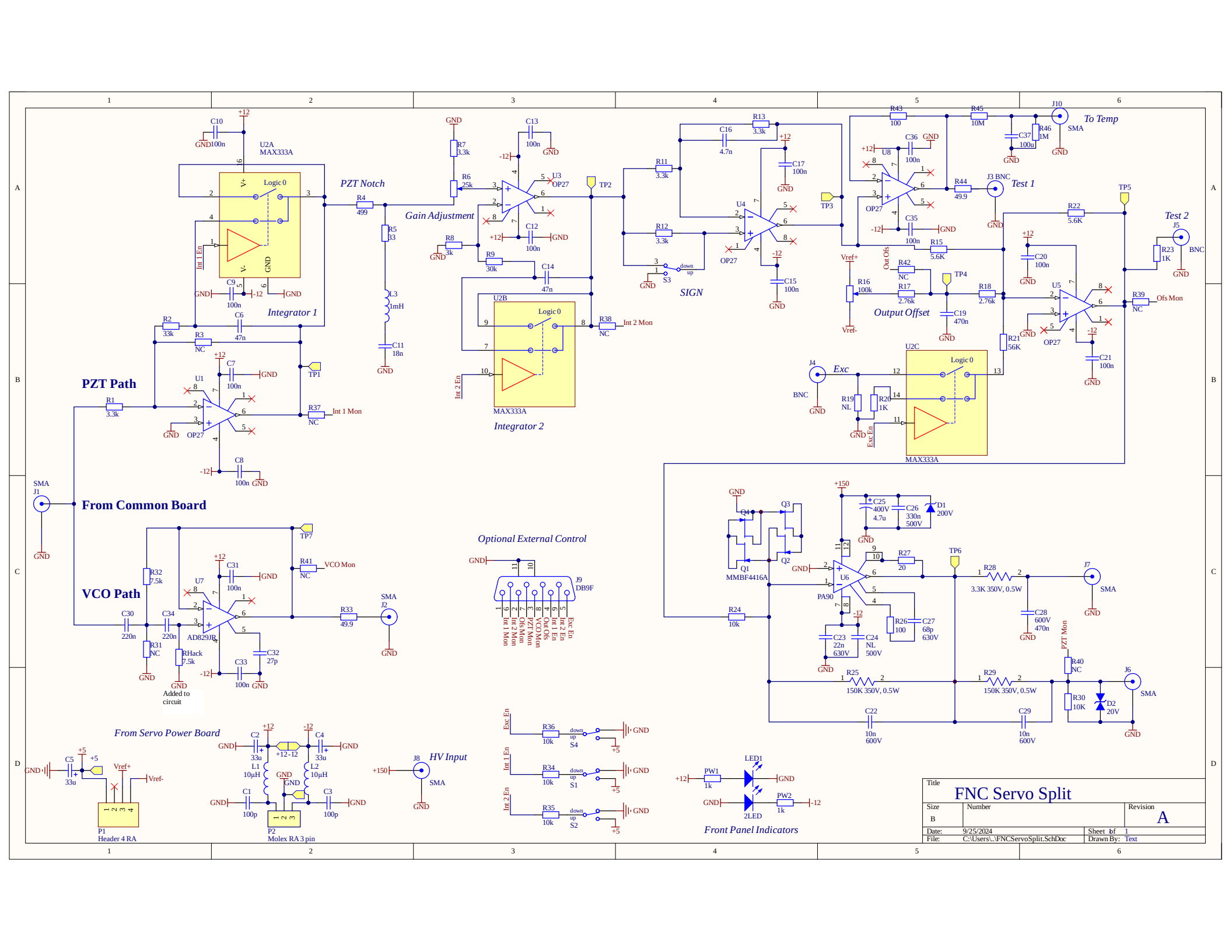
PZT Path
From Common Board
VCO Path
PZT Notch
Gain Adjustment
Integrator 1
Integrator 2
SIGN
Output Offset
Test 1
Test 2
To Temp
Exc
Optional External Control
From Servo Power Board
HV Input
Front Panel Indicators
Added to circuit
P1
Header 4 RA
P2
Molex RA 3 pin
U2A MAX333A
U2B MAX333A
U2C MAX333A
U1 OP27
U3 OP27
U4 OP27
U5 OP27
U6 PA90
U7 AD829JR
U8 OP27
Q1 MMBF4416A
Q2
Q3
Q4
J1 SMA
J2 SMA
J3 BNC
J4 BNC
J5 BNC
J6 SMA
J7 SMA
J8 SMA
J9 DB9F
J10 SMA
S1
S2
S3
S4
LED1
2LED
D1 200V
D2 20V
Title
FNC Servo Split
Size B
Number
Revision A
Date: 9/25/2024
Sheet bf 1
File: C:\Users\..\FNCServoSplit.SchDoc
Drawn By: Text

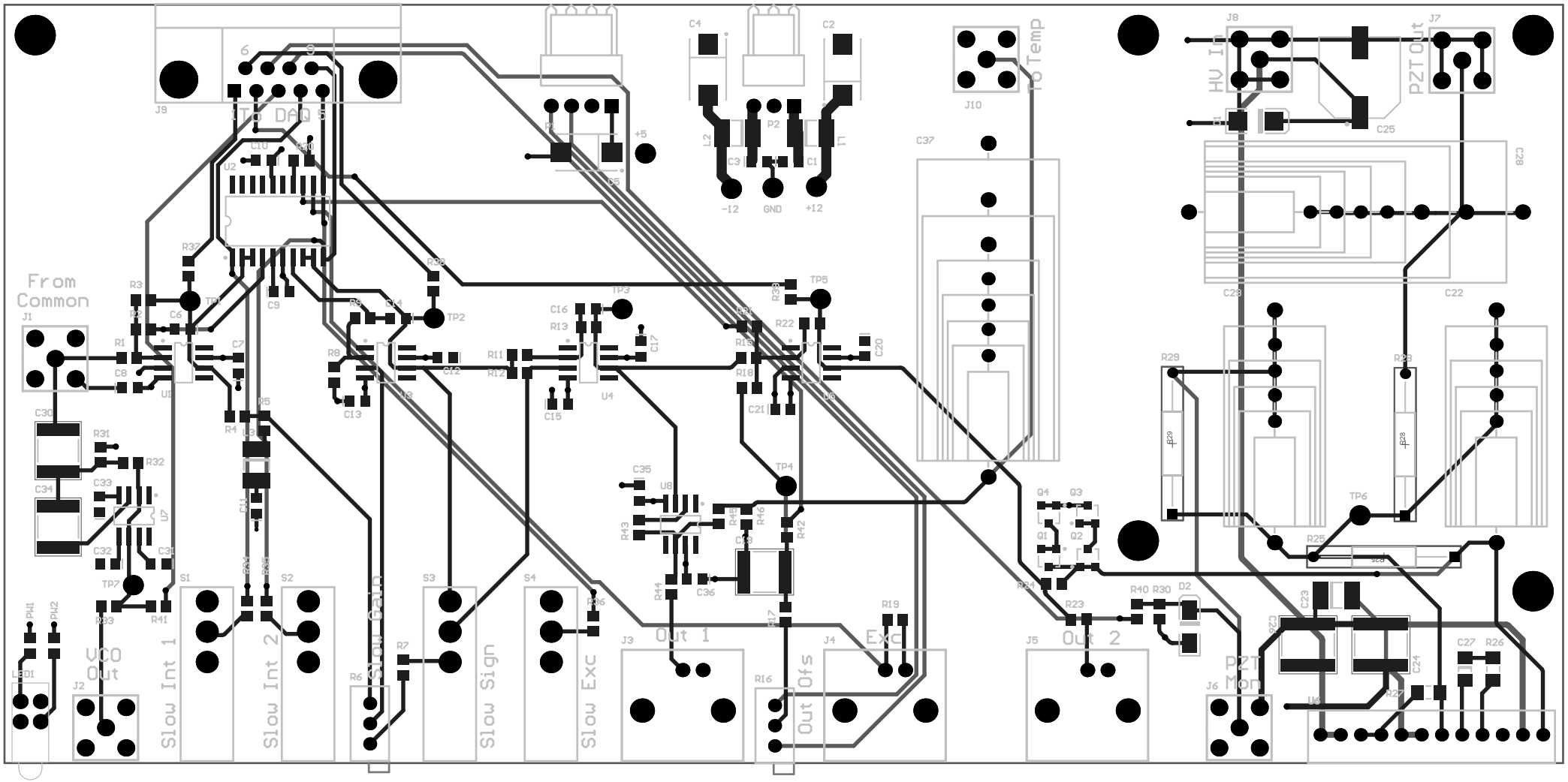

From Common
To DAQ 5
To Temp
HV In
PZT Out
VCO Out
Slow Int 1
Slow Int 2
Slow Gain
Slow Sign
Slow Exc
Out 1
Out Ofs
Exc
Out 2
PZT Mon
-12
GND
+12

Comment	Description	Designator	Footprint	LibRef	Quantity
Testpoint	Testpoint, Testpoint, yellow	-12, +5, +12, GND, TP1, TP2, TP3, TP4, TP5, TP6, TP7	TP1	TP, TP_SIGNAL	11
100p	Capacitor, surface mount	C1, C3	CC2013-0805	ChipCap	2
33u	Tantalum capacitor, surface mount	C2, C4, C5	TC7343-2917	ChipTantalum	3
47n	Capacitor, surface mount	C6, C14	CC2013-0805	ChipCap	2
100n	Capacitor, surface mount	C7, C8, C9, C10, C12, C13, C15, C17, C20, C21, C31, C33, C35, C36	CC2013-0805	ChipCap	14
18n	Capacitor, surface mount	C11	CC2013-0805	ChipCap	1
4.7n	Capacitor, surface mount	C16	CC2013-0805	ChipCap	1
470n	Capacitor, surface mount	C19	CC5650-2220	ChipCap	1
10n	Film Capacitor, axial lead	C22, C29	CA-ALL5	CapFilmAxial	2
22n	Capacitor, surface mount	C23	CL4532-1812	ChipCap	1
NL	Capacitor, surface mount	C24	CC5664-2225	ChipCap	1
4.7u	Electrolyte capacitor, surface mount	C25	AC103-041/G	ChipElectrolyte	1
330n	Capacitor, surface mount	C26	CC5664-2225	ChipCap	1
68p	Capacitor, surface mount	C27	CC3216-1206	ChipCap	1
470n	Film Capacitor, axial lead	C28	CA-ALL7	CapFilmAxial	1
220n	Capacitor, surface mount	C30, C34	CC5650-2220	ChipCap	2
27p	Capacitor, surface mount	C32	CC2013-0805	ChipCap	1
100u	Film Capacitor, axial lead	C37	CA-ALL7	CapFilmAxial	1
zener diode	Single zener diode	D1	DO-SMB	DIODE_ZENER	1
zener diode	TVS	D2	DO-SMA	DIODE_ZENER	1
SMA	SMA, PCB Mount, Right Angle	J1, J2, J6, J7, J8, J10	SMA	SMA	6
BNC	BNC, PCB Mount, Right Angle	J3, J4, J5	BNC1	BNC	3
DB9F	Receptacle Assembly, 9 Position, Right Angle, .318 Series	J9	DB9F-RA	DB9F	1
10µH	10UH, 360mA 10 @2.252 MHZ	L1, L2	CL4532-1812	INDUCTOR	2
1mH	Inductor	L3	CL4532-1812	ChipInductor	1
OLED		LED1	OLED	OLED	1
Header 4 RA	Header, 4-Pin	P1	MOLEX_100_RA_4	Header 4	1
Molex RA 3 pin		P2	MOLEX_100_RA_3	MOLEX_100_RA_3	1
1k	Resistor, surface mount	PW1, PW2, R20, R23	CR2012-0805	ChipRes1	4
MMBF4416A	N-channel Silicon Junction Field-effect Transistor	Q1, Q2, Q3, Q4	SO-G3/C2.25	PMBF4416A	4
3.3k	Resistor, surface mount	R1, R7, R11, R12, R13	CR2012-0805	ChipRes1	5
33k	Resistor, surface mount	R2	CR2012-0805	ChipRes1	1
NC	Resistor, surface mount	R3, R31, R37, R38, R39, R40, R41, R42	CR2012-0805	ChipRes1	8
499	Resistor, surface mount	R4	CR2012-0805	ChipRes1	1
33	Resistor, surface mount	R5	CR2012-0805	ChipRes1	1
25k	Potentiometer	R6	POT3296X	ResPot	1
3k	Resistor, surface mount	R8	CR2012-0805	ChipRes1	1
30k	Resistor, surface mount	R9	CR2012-0805	ChipRes1	1
5.6K	Resistor, surface mount	R15, R22	CR2012-0805	ChipRes1	2
100k	Potentiometer	R16	POT3296X	ResPot	1
2.76k	Resistor, surface mount	R17, R18	CR2012-0805	ChipRes1	2
NL	Resistor, surface mount	R19	CR2012-0805	ChipRes1	1
56K	Resistor, surface mount	R21	CR2012-0805	ChipRes1	1
10k	Resistor, surface mount	R24, R30, R34, R35, R36	CR2012-0805	ChipRes1	5
150K 350V, 0.5W	PR01000101009JR500 Fixed Resistor, Metal Film, 1W, 100ohm, 350V, 5% +/-Tol, 250ppm/Cel, Through Hole Mount	R25, R29	FP-PR01-MFG	CMP-00030-42467166-1	2
100	Resistor, surface mount	R26	CR3216-1206	ChipRes1	1
20	Resistor, surface mount	R27	CR3216-1206	ChipRes1	1
3.3K 350V, 0.5W	PR01000101009JR500 Fixed Resistor, Metal Film, 1W, 100ohm, 350V, 5% +/-Tol, 250ppm/Cel, Through Hole Mount	R28	FP-PR01-MFG	CMP-00030-42467166-1	1
7.5k	Resistor, surface mount	R32, RHack	CR2012-0805	ChipRes1	2
49.9	Resistor, surface mount	R33, R44	CR2012-0805	ChipRes1	2
100	Resistor, surface mount	R43	CR2012-0805	ChipRes1	1
10M	Resistor, surface mount	R45	CR2012-0805	ChipRes1	1
1M	Resistor, surface mount	R46	CR2012-0805	ChipRes1	1
101	Switch, SPDT, PCB right-angle	S1, S2, S3, S4	SW-7103	SW_101	4
OP27	High-Speed, Low-Noise Video Operational Amplifier, High-Speed, Low-Power Monolithic Operational Amplifier, Ultra-Low Distortion, Ultra-Low Noise Operational Amplifier	U1, U3, U4, U5, U8	SO-G8	AD829JR, AD847JR, AD797AR	5
MAX333A	Quad SPDT analog switch	U2	SO-G20	MAX333A	1
PA90	HV Power Op Amp, socket 64 pin	U6	PA98	PA98	1
AD829JR	High-Speed, Low-Noise Video Operational Amplifier	U7	SO-G8	AD829JR	1