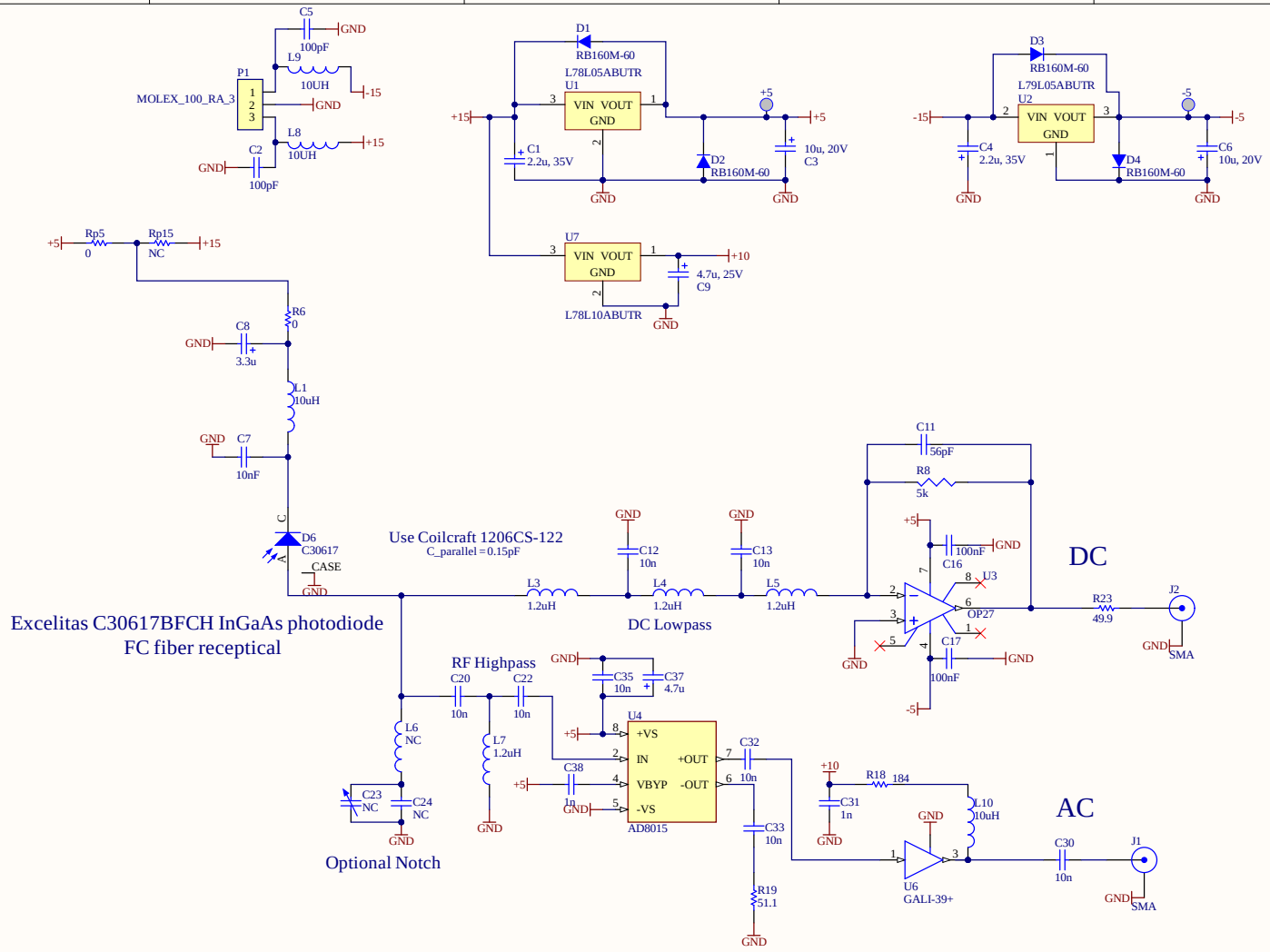


| | | | |
|---|---|---|---|
| Title | Broadband PD 1550 nm | | |
| Size: B | Number: | | Revision: |
| Date: 8/30/2023 | | Sheet of | |
| File: C:\Users\..\BPD.SchDoc | | Drawn By: Eric Oelker | |

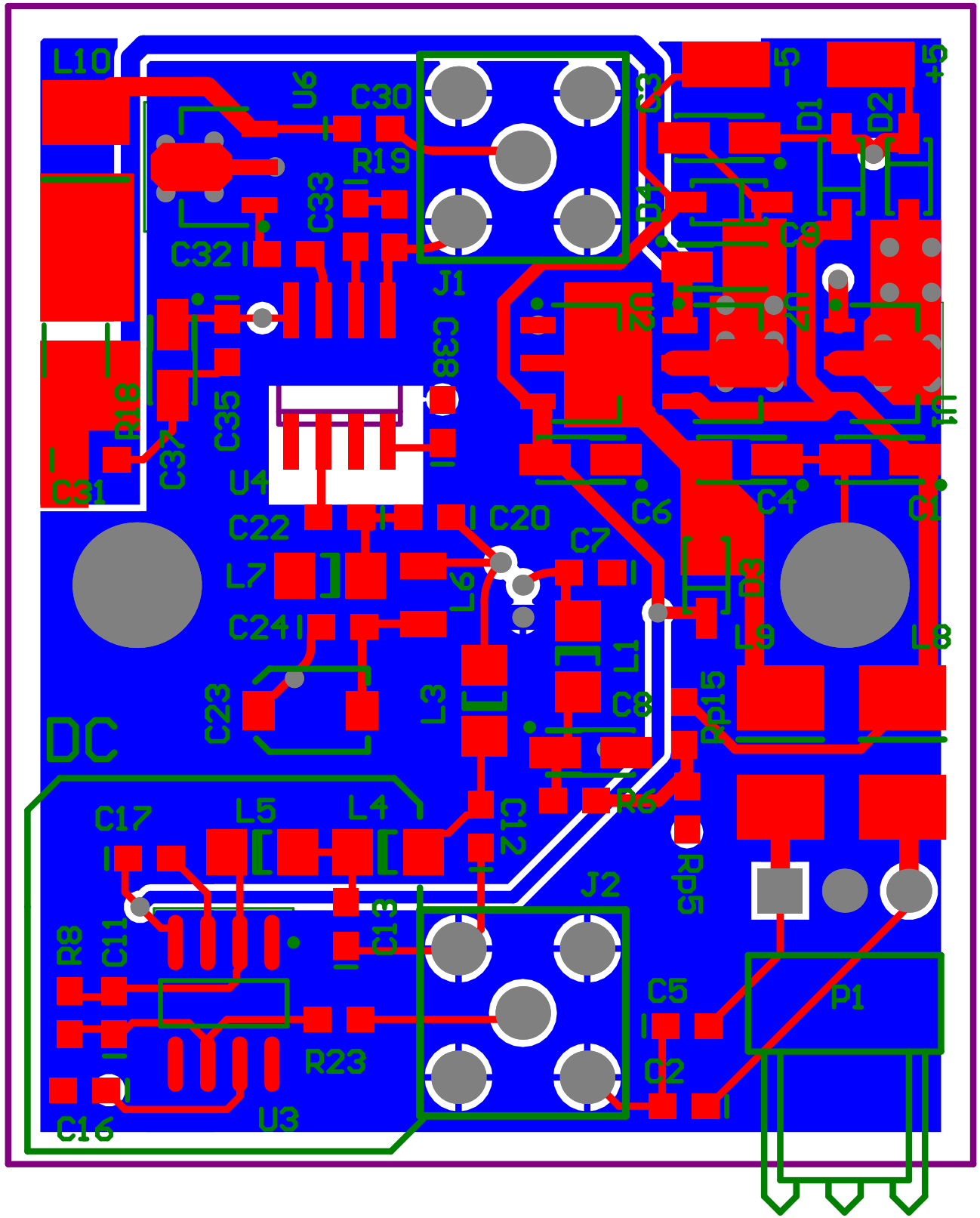
L10
U6
C30
R19
C33
C32
J1
C38
C35
C37
R18
C31
U4
C22
C20
C7
C6
C4
C1
L7
L6
C24
L1
L9
L8
C23
L3
C8
Rp15
DC
C17
L5
L4
C12
R6
Rp5
J2
R8
C11
C13
C5
P1
R23
C2
C16
U3
-5
+5
D1
D2
D4
C9
Z2
Z1
U1
D3

# Board Stack Report