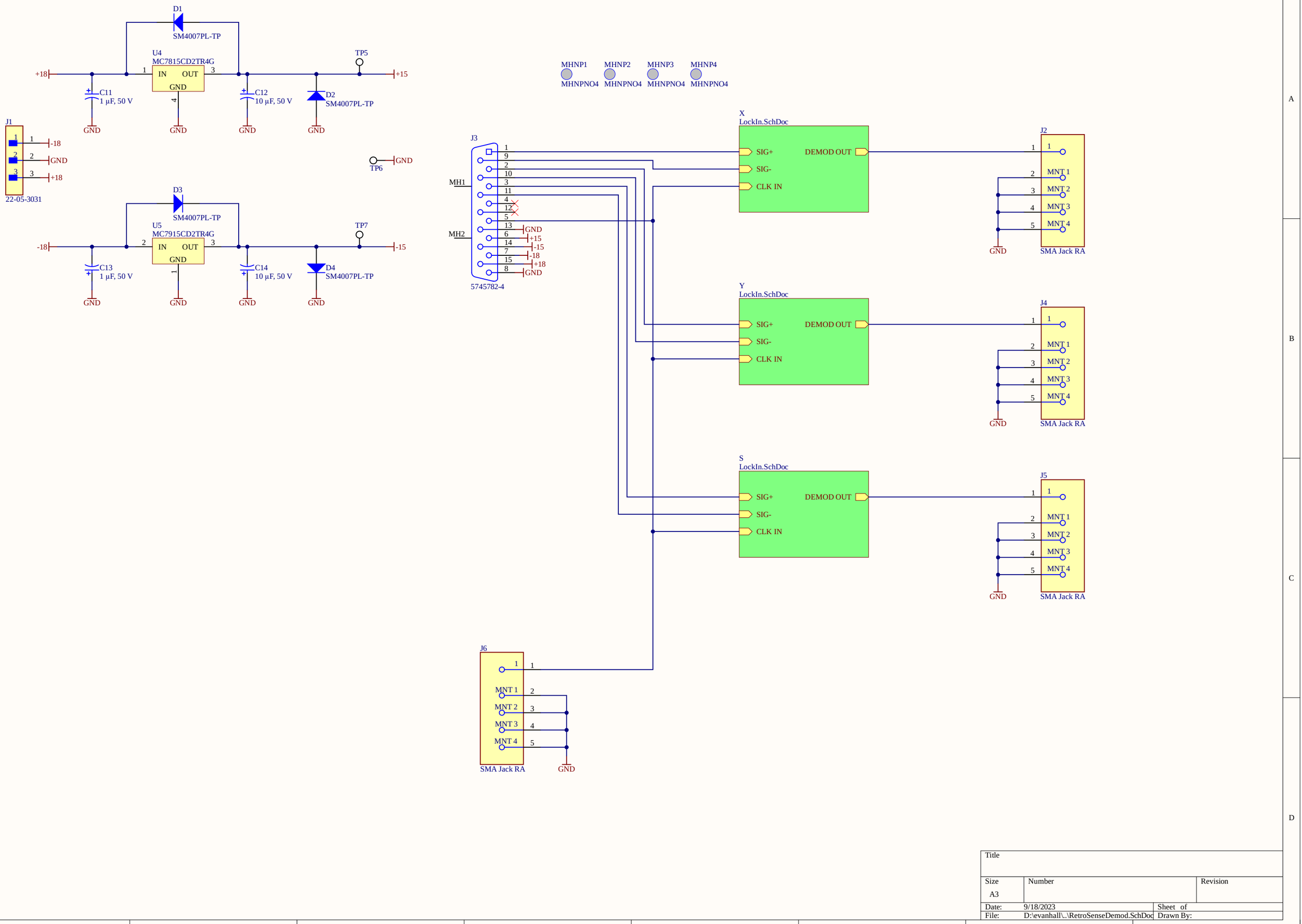

Title			
Size A3	Number		Revision
Date: 9/18/2023		Sheet of	
File: D:\evanhall\..\RetroSenseDemod.SchDoc		Drawn By:	

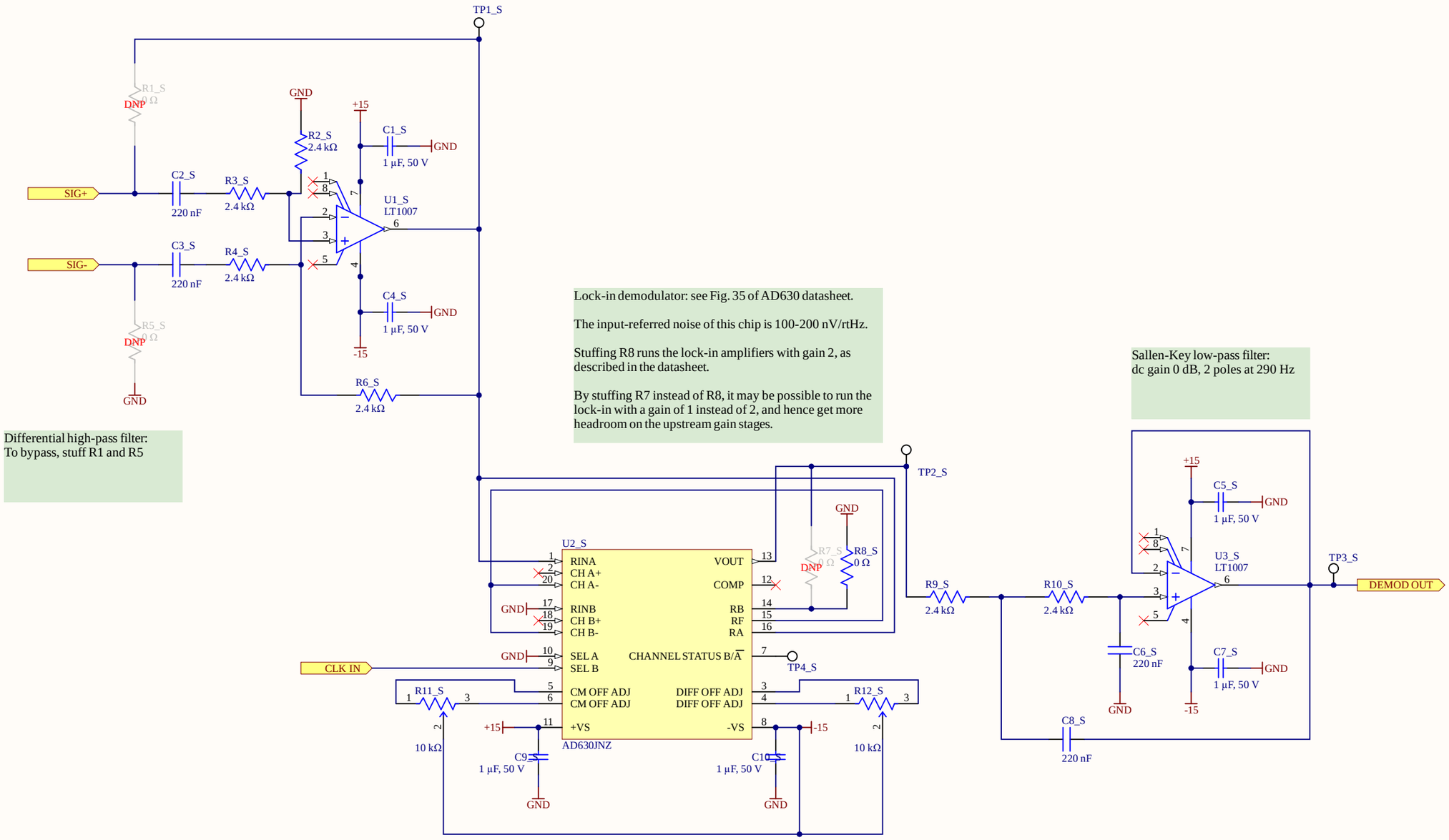

Title		
Size: A3	Number	Revision
Date: 9/18/2023		Sheet of
File: D:\evanhall\..\LockIn.SchDoc		Drawn By:

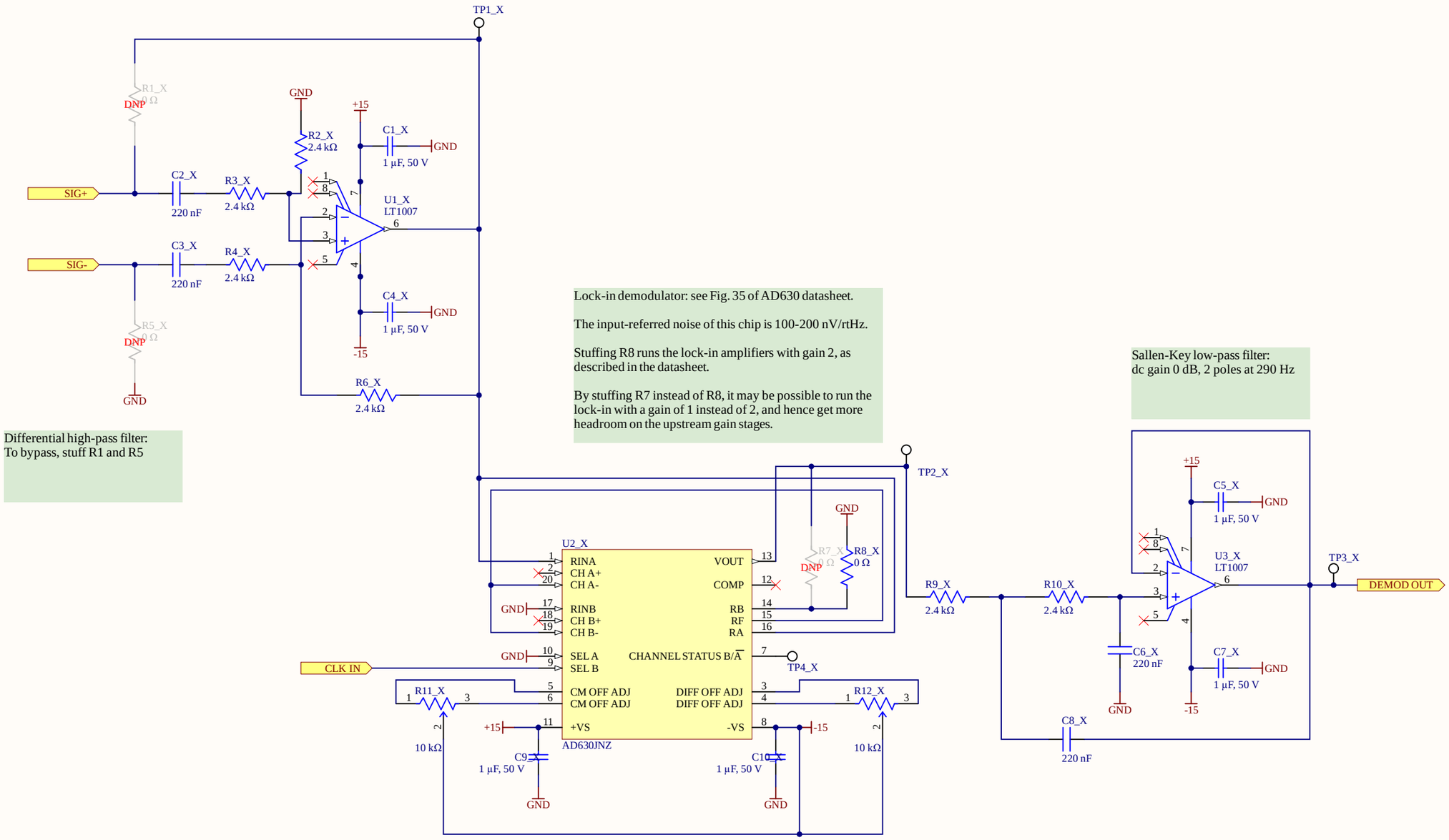

Title		
Size: A3	Number	Revision
Date: 9/18/2023		Sheet of
File: D:\evanhall\..\LockIn.SchDoc		Drawn By:

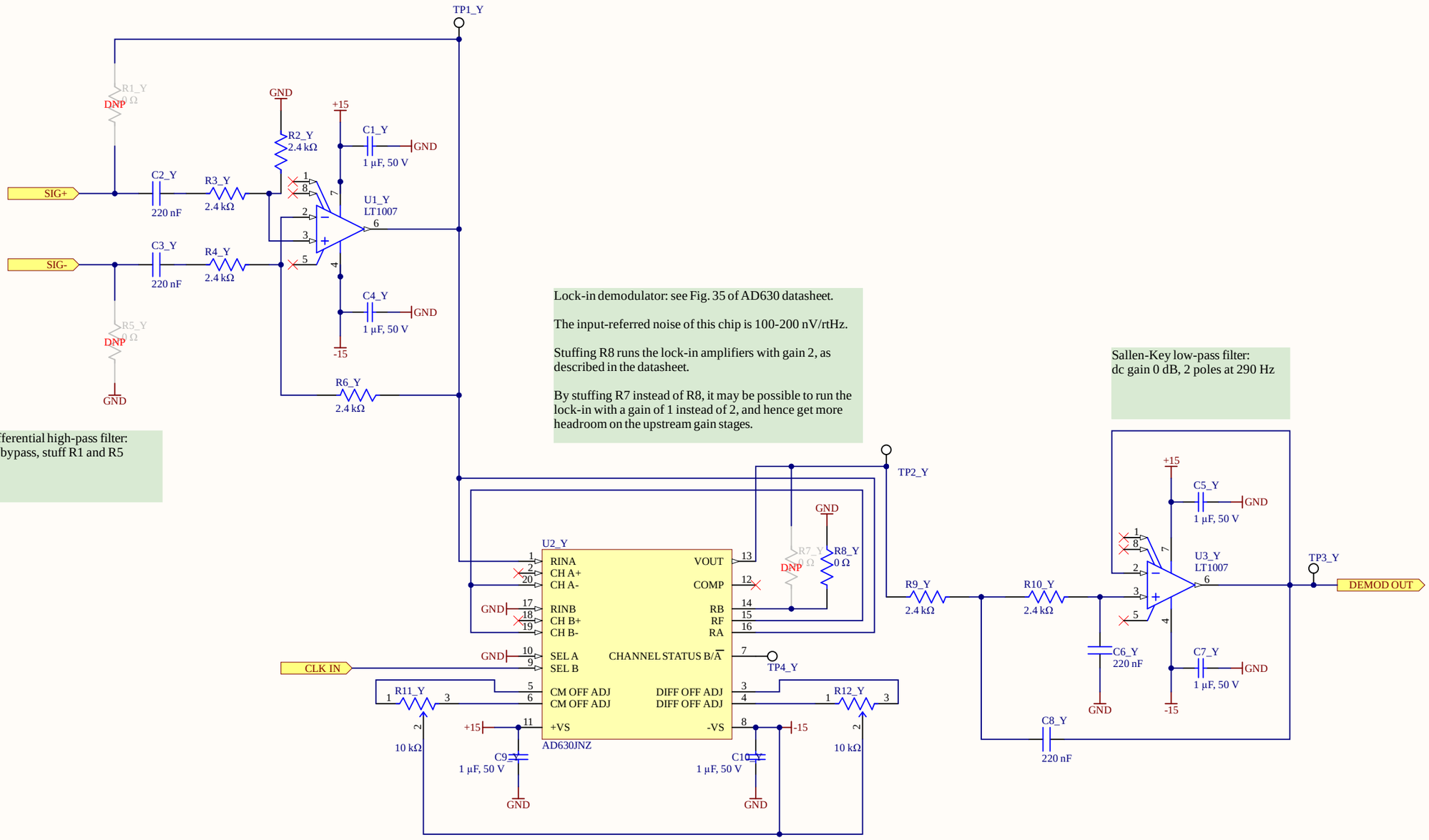

Title		
Size: A3	Number	Revision
Date: 9/18/2023		Sheet of
File: D:\evanhall\..\LockIn.SchDoc		Drawn By:

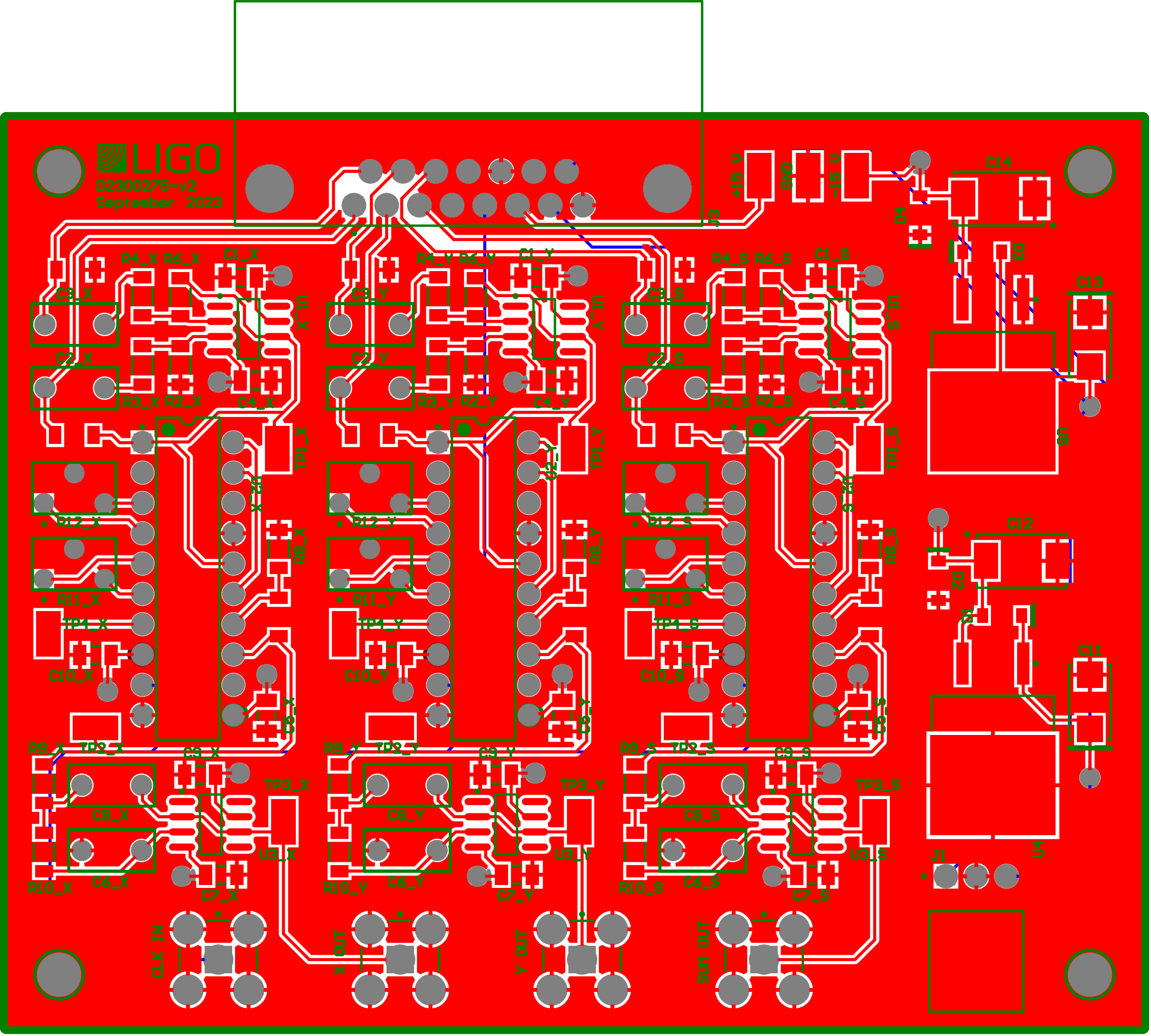
LIGO
D2300275-v2
September 2023
R4_X R6_X C1_X
C8_X
C2_X
R3_X R2_X C4_X
TP1_X
R12_X
R11_X
TP4_X
C10_X
R9_X TP2_X C9_X
C8_X
TP3_X
U3_X
R10_X C6_X C7_X
R4_Y R6_Y C1_Y
C8_Y
C2_Y
R3_Y R2_Y C4_Y
TP1_Y
R12_Y
R11_Y
TP4_Y
C10_Y
R9_Y TP2_Y C9_Y
C8_Y
TP3_Y
U3_Y
R10_Y C6_Y C7_Y
R4_S R6_S C1_S
C8_S
C2_S
R3_S R2_S C4_S
TP1_S
R12_S
R11_S
TP4_S
C10_S
R9_S TP2_S C9_S
C8_S
TP3_S
U3_S
R10_S C6_S C7_S
C14
C13
C12
C11
U5
U4
J1
CLK IN
X OUT
Y OUT
SUM OUT

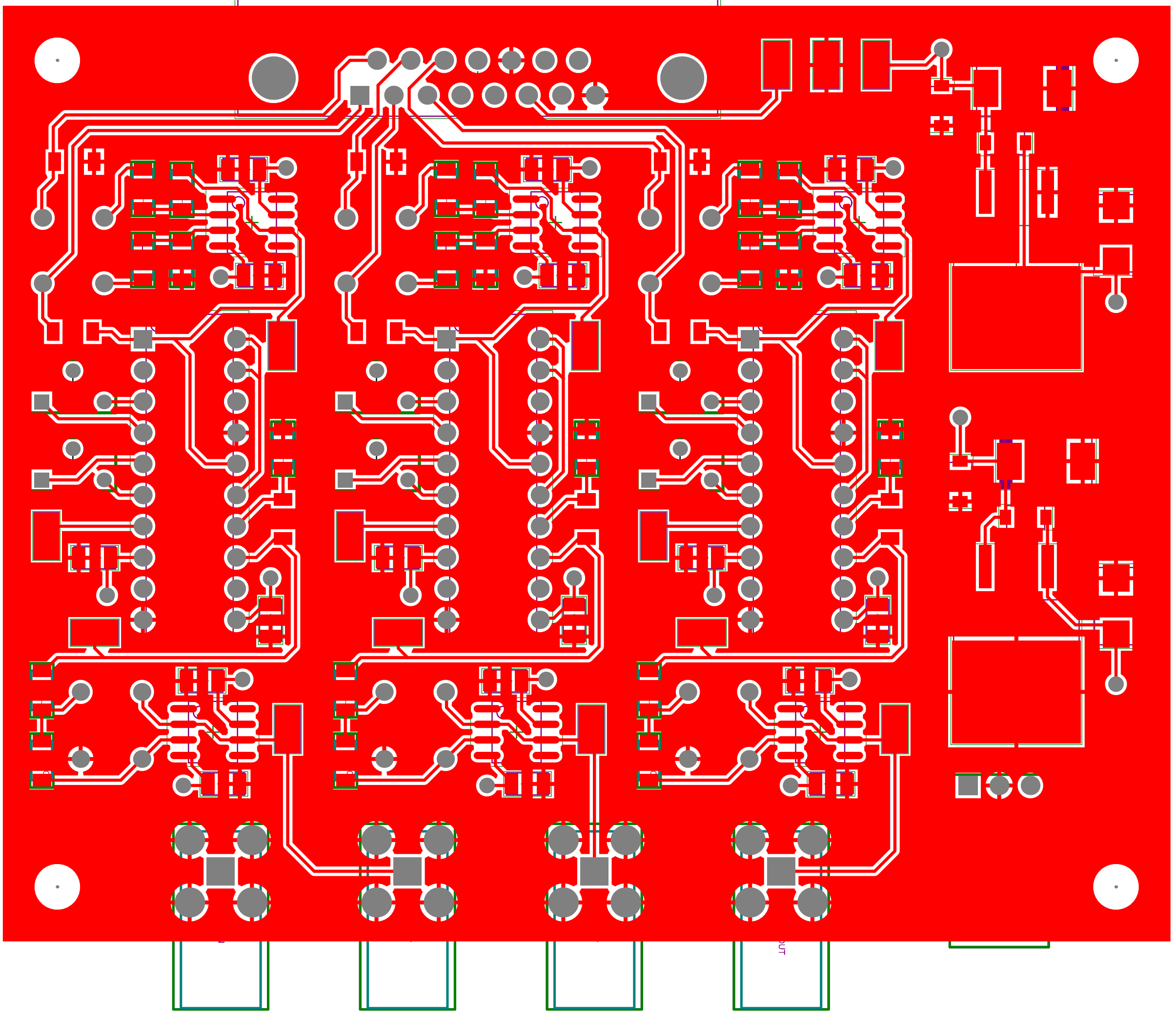

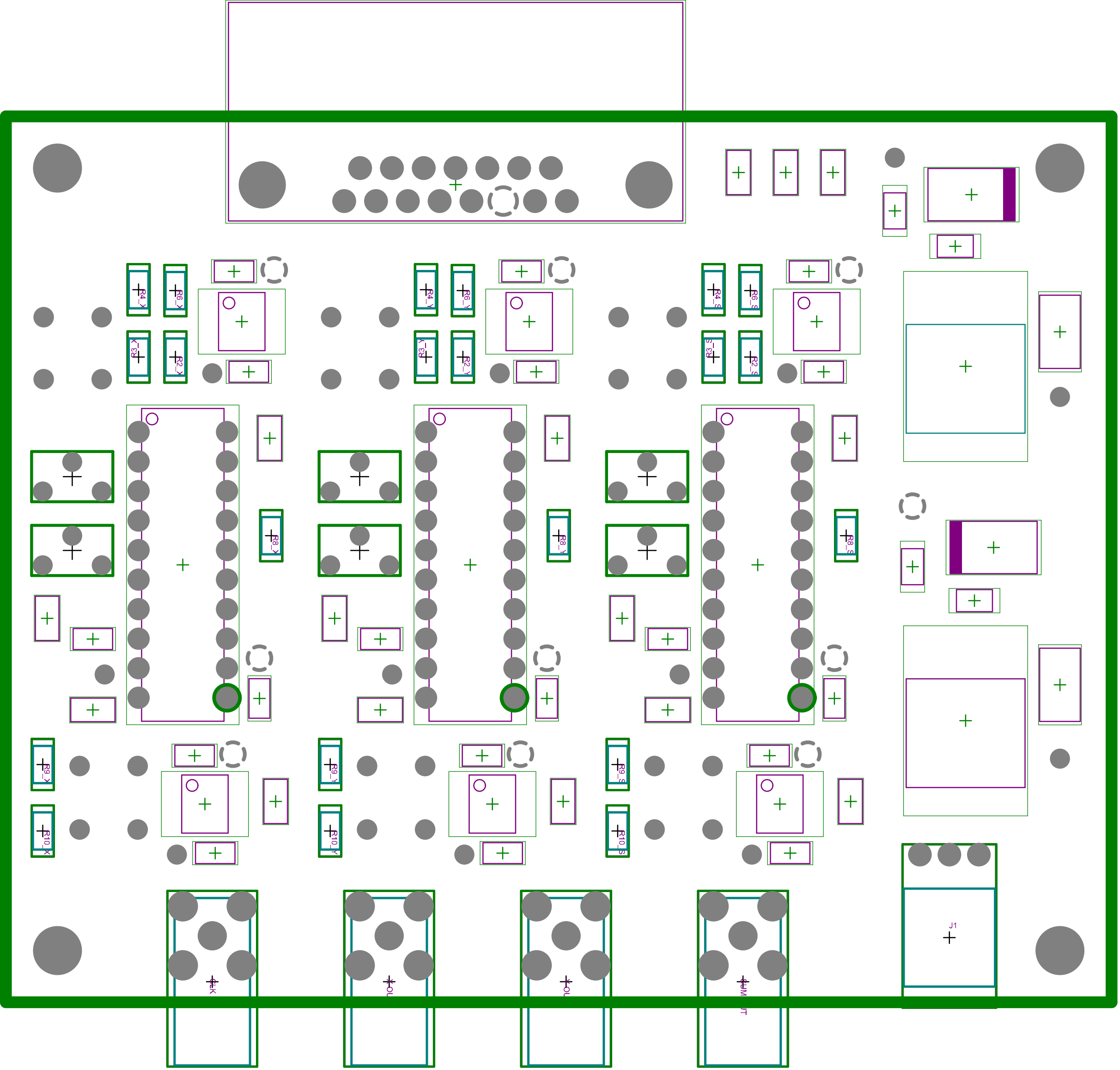
R4_X
R6_X
R3_X
R2_X
R4_Y
R6_Y
R3_Y
R2_Y
R4_S
R6_S
R3_S
R2_S
R8_X
R8_Y
R8_S
R9_X
R10_X
R9_Y
R10_Y
R9_S
R10_S
J1

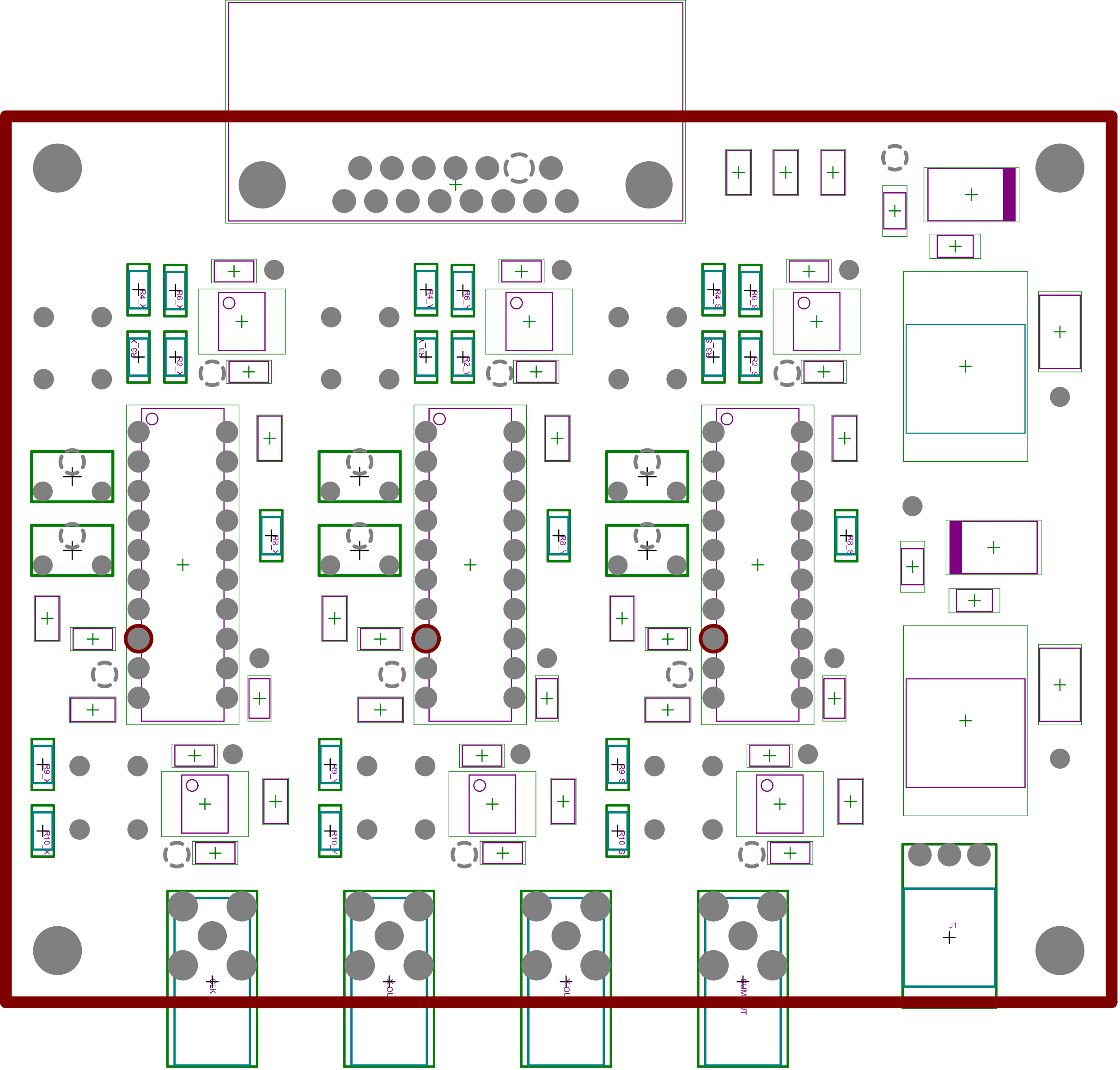
R4_X
R6_X
R3_X
R2_X
R4_Y
R6_Y
R3_Y
R2_Y
R4_S
R6_S
R3_S
R2_S
R8_X
R8_Y
R8_S
R9_X
R10_X
R9_Y
R10_Y
R9_S
R10_S
J1

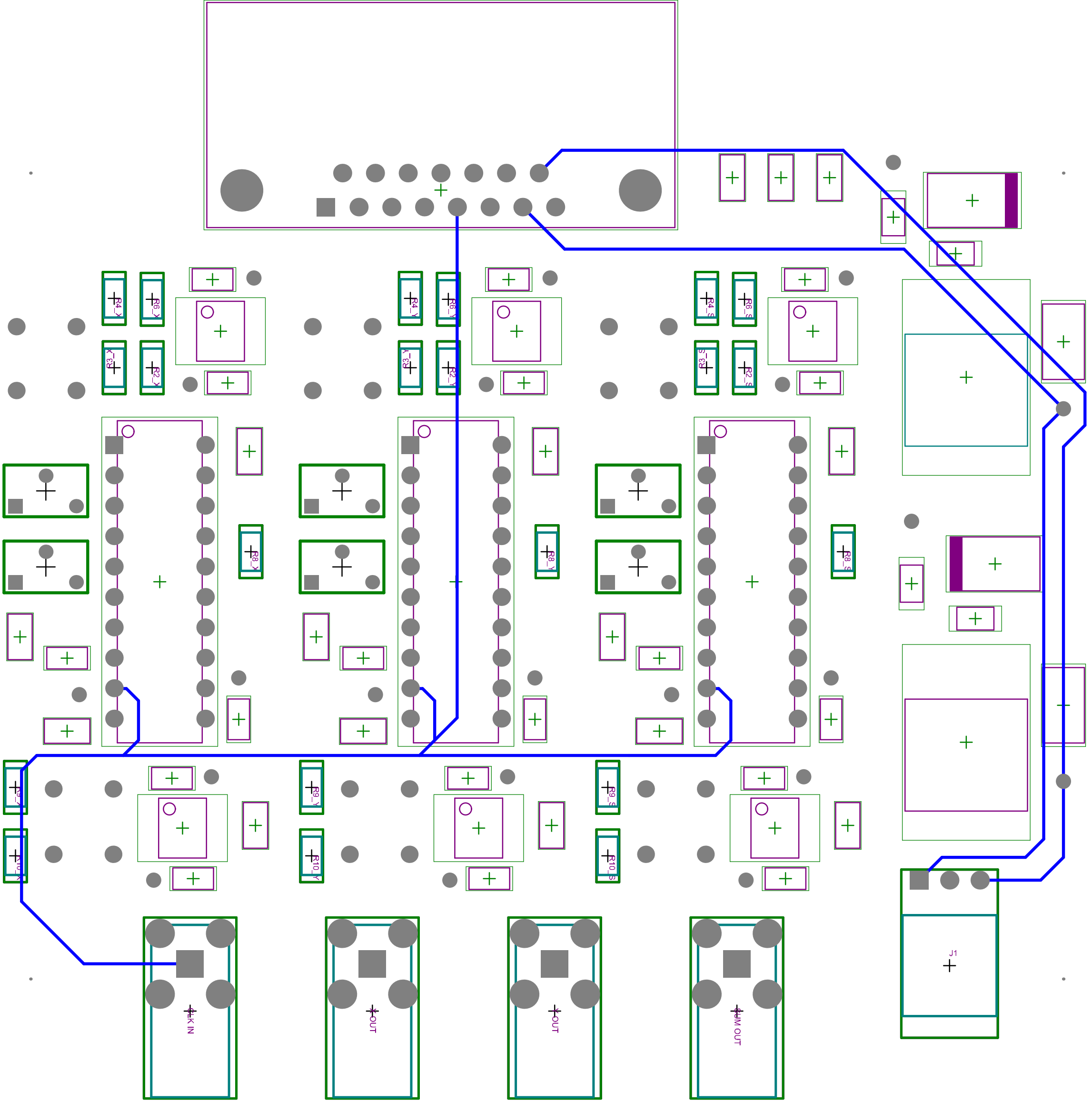
R4_X
R6_X
R3_X
R2_X
R4_Y
R6_Y
R3_Y
R2_Y
R4_S
R6_S
R3_S
R2_S
R8_X
R8_Y
R8_S
R9_X
R10_X
R9_Y
R10_Y
R9_S
R10_S
J1
BLK IN
OUT
OUT
PUM OUT

LIGO
D2300275-v2
September 2023

J3
+15 V
GND
-15 V
C14
D4
D3
C13
U5
C12
D2
D1
C11
U4
J1

R4_X R6_X C1_X
C3_X
C2_X
R3_X R2_X C4_X
U1_X
R12_X
R11_X
TP4_X
C10_X
TP1_X
U2_X
R8_X
TP2_X
C5_X
R9_X
C8_X
R10_X
C6_X
C9_X
TP3_X
U3_X
C7_X

R4_Y R6_Y C1_Y
C3_Y
C2_Y
R3_Y R2_Y C4_Y
U1_Y
R12_Y
R11_Y
TP4_Y
C10_Y
TP1_Y
U2_Y
R8_Y
TP2_Y
C5_Y
R9_Y
C8_Y
R10_Y
C6_Y
C9_Y
TP3_Y
U3_Y
C7_Y

R4_S R6_S C1_S
C3_S
C2_S
R3_S R2_S C4_S
U1_S
R12_S
R11_S
TP4_S
C10_S
TP1_S
U2_S
R8_S
TP2_S
C5_S
R9_S
C8_S
R10_S
C6_S
C9_S
TP3_S
U3_S
C7_S

CLK IN
X OUT
Y OUT
SUM OUT

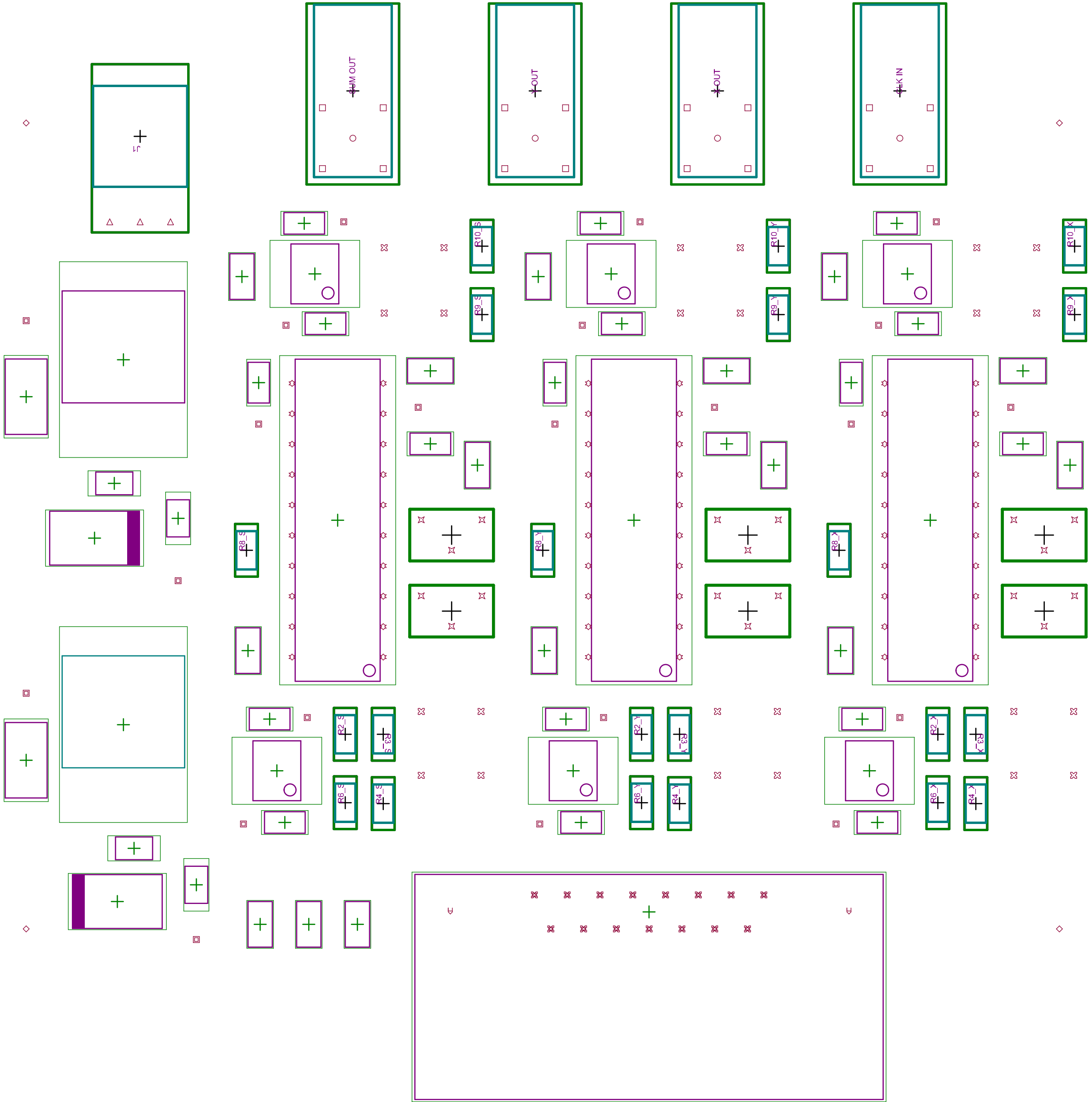
J1
SUM OUT
X OUT
Y OUT
CLK IN
R10_S
R9_S
R10_Y
R9_Y
R10_X
R9_X
R8_S
R8_Y
R8_X
R2_S
R3_S
R6_S
R4_S
R2_Y
R3_Y
R6_Y
R4_Y
R2_X
R3_X
R6_X
R4_X

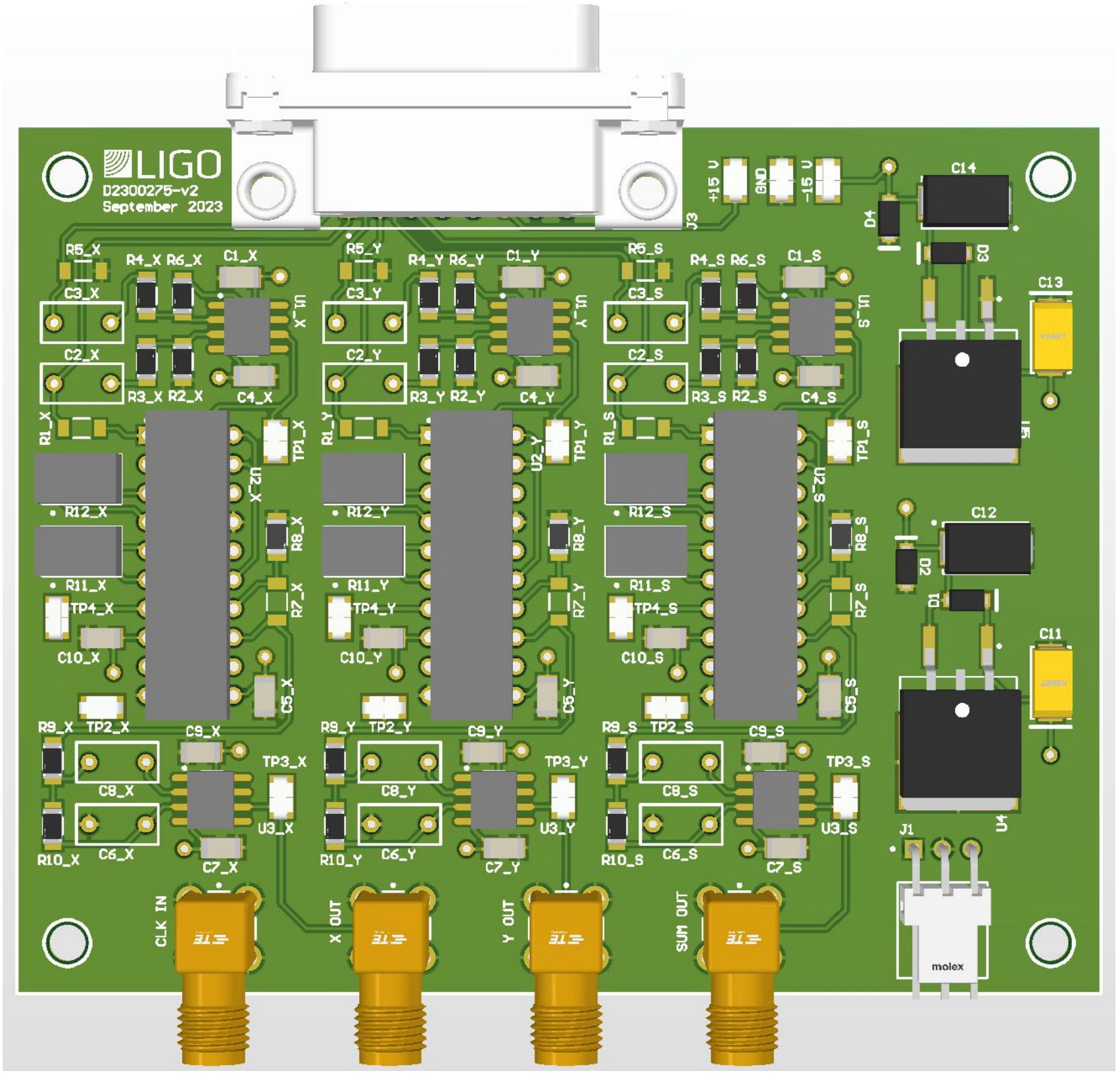
LIGO
D2300275-v2
September 2023
+15 V
GND
-15 V
J3
D4
C14
D3
C13
U5
C12
D2
D1
C11
U4
J1
molex
R5_X
R4_X
R6_X
C1_X
C3_X
C2_X
R3_X
R2_X
C4_X
U1_X
R1_X
TP1_X
U2_X
R12_X
R11_X
TP4_X
C10_X
R8_X
R7_X
C5_X
R9_X
TP2_X
C8_X
C6_X
R10_X
C9_X
C7_X
TP3_X
U3_X
R5_Y
R4_Y
R6_Y
C1_Y
C3_Y
C2_Y
R3_Y
R2_Y
C4_Y
U1_Y
R1_Y
TP1_Y
U2_Y
R12_Y
R11_Y
TP4_Y
C10_Y
R8_Y
R7_Y
C5_Y
R9_Y
TP2_Y
C8_Y
C6_Y
R10_Y
C9_Y
C7_Y
TP3_Y
U3_Y
R5_S
R4_S
R6_S
C1_S
C3_S
C2_S
R3_S
R2_S
C4_S
U1_S
R1_S
TP1_S
U2_S
R12_S
R11_S
TP4_S
C10_S
R8_S
R7_S
C5_S
R9_S
TP2_S
C8_S
C6_S
R10_S
C9_S
C7_S
TP3_S
U3_S
CLK IN
X OUT
Y OUT
SUM OUT

