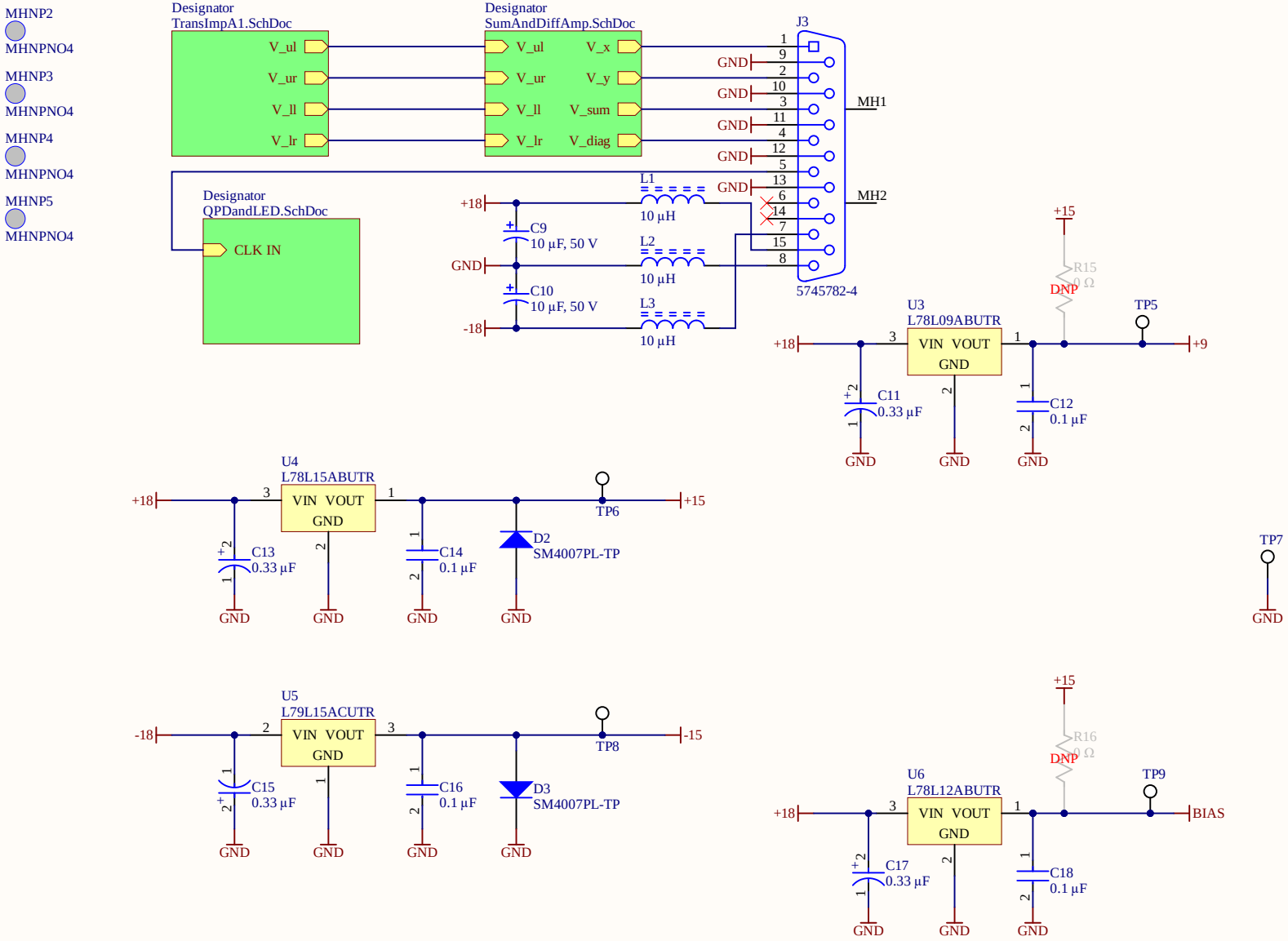

Title		
Size: A	Number	Revision
Date: 9/26/2023		Sheet of
File: D:\msredden\..\RetroSenseHead.SchDoc		Drawn By:

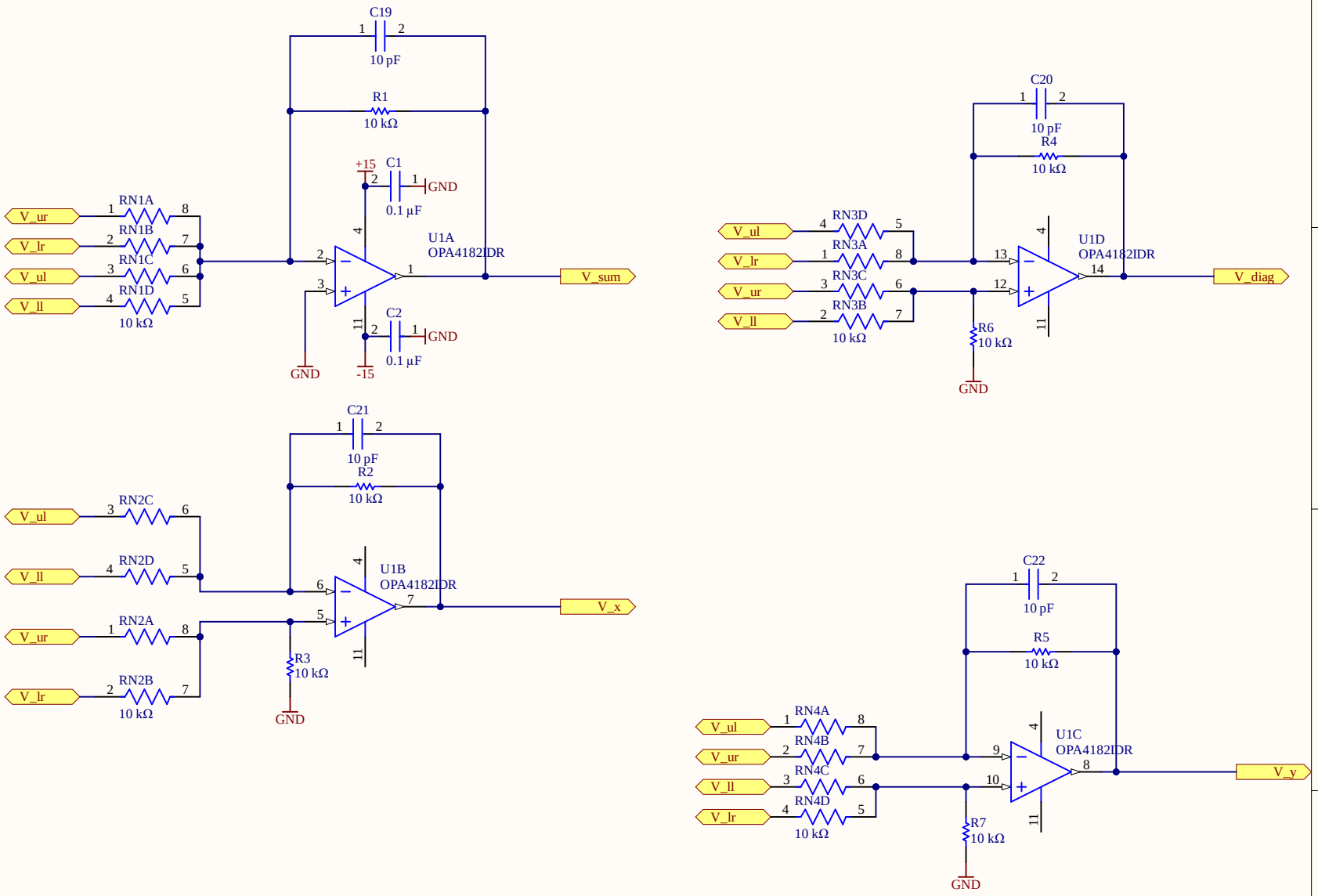

Title		
Size: A	Number	Revision
Date: 9/26/2023		Sheet of
File: D:\msredden\..\SumAndDiffAmp.SchDoc		Drawn By:

MHNP1

MHNP_5mm

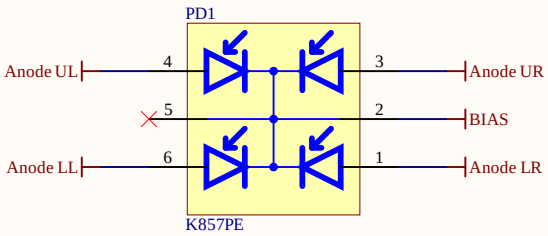

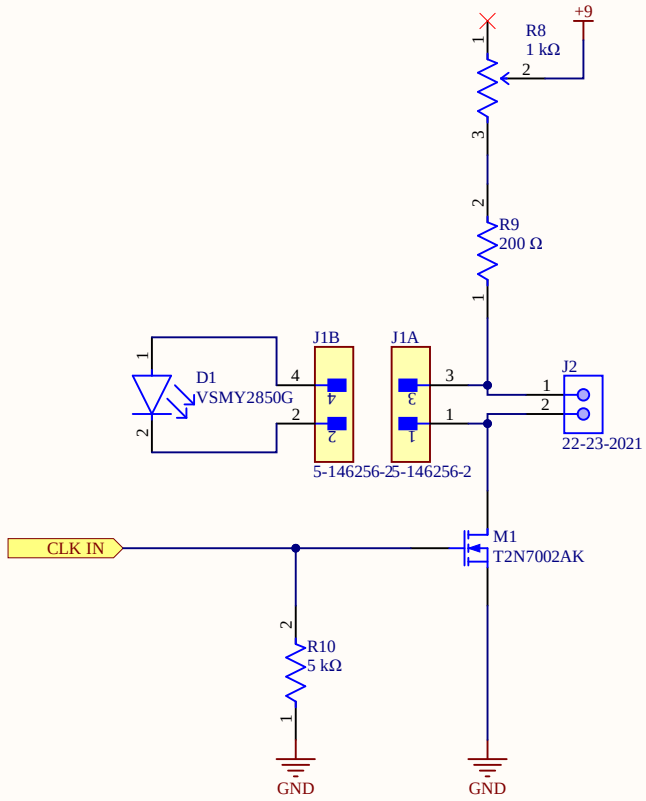

Title		
Size: A	Number:	Revision:
Date: 9/26/2023		Sheet of
File: D:\msredden\..\QPDandLED.SchDoc		Drawn By:

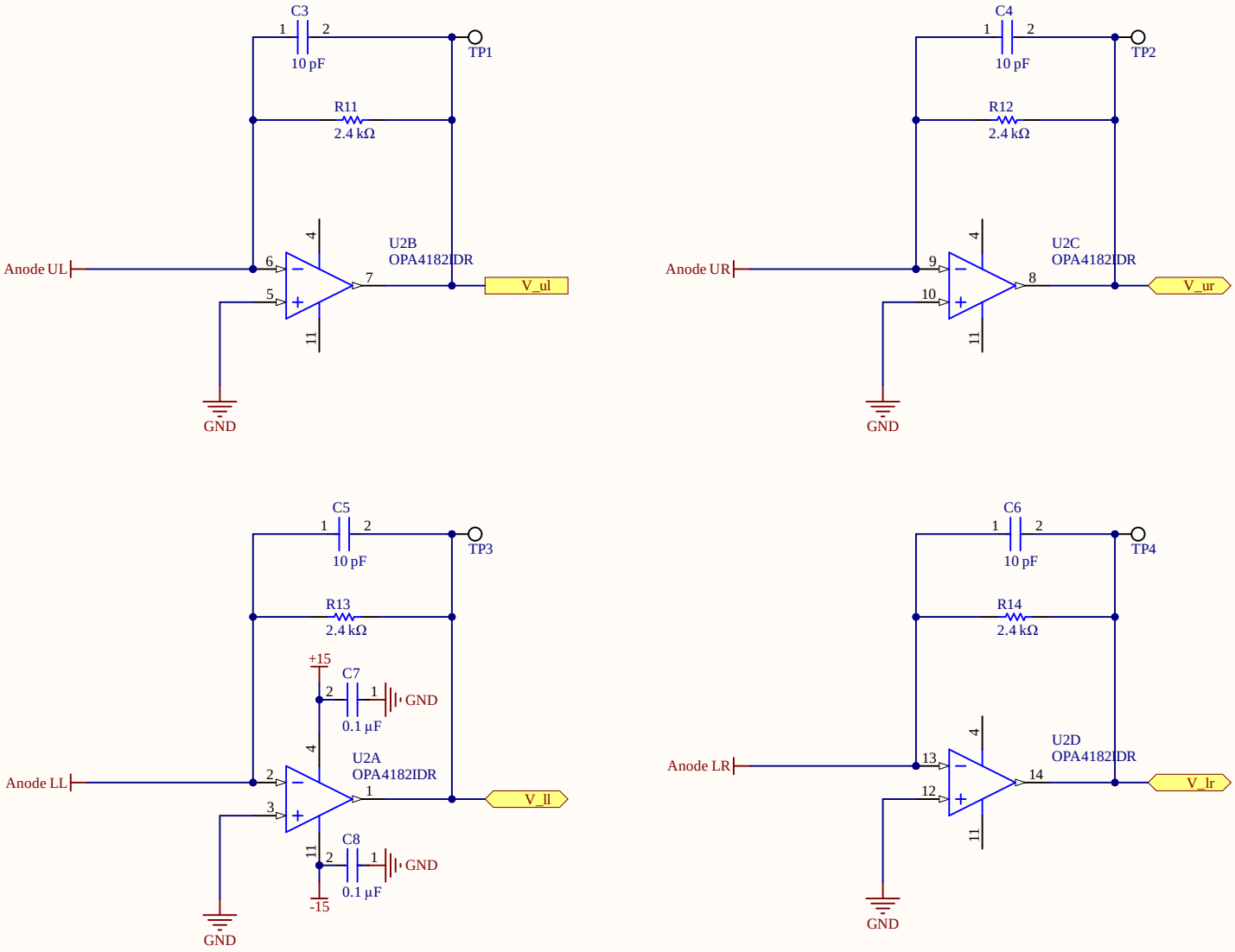

Title		
Size: A	Number	Revision
Date: 9/26/2023		Sheet of
File: D:\msredden\..\TransImpA1.SchDoc		Drawn By:

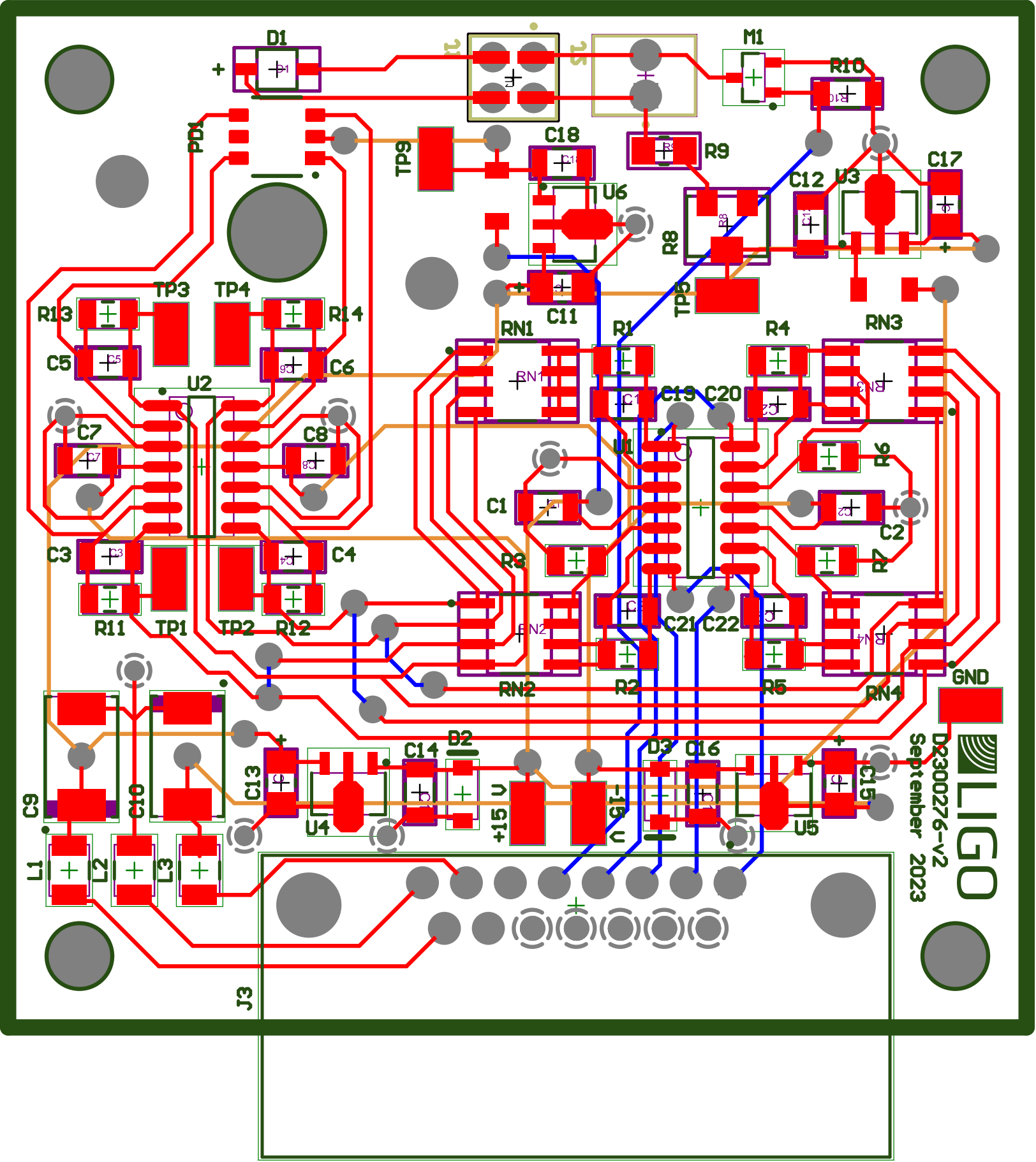
D1
M1
R10
PD1
TP9
C18
R9
U6
C12
U3
C17
R8
TP5
C11
TP3
TP4
R13
R14
C5
C6
U2
RN1
R1
R4
RN3
C19
C20
C7
C8
U1
R6
C1
C2
C3
C4
R3
R7
R11
TP1
TP2
R12
C21
C22
RN2
R2
R5
RN4
GND
C9
C10
C13
C14
D2
D3
C16
C15
U4
+15 V
-15 V
U5
L1
L2
L3
J3
LIGO
D2300276-v2
September 2023

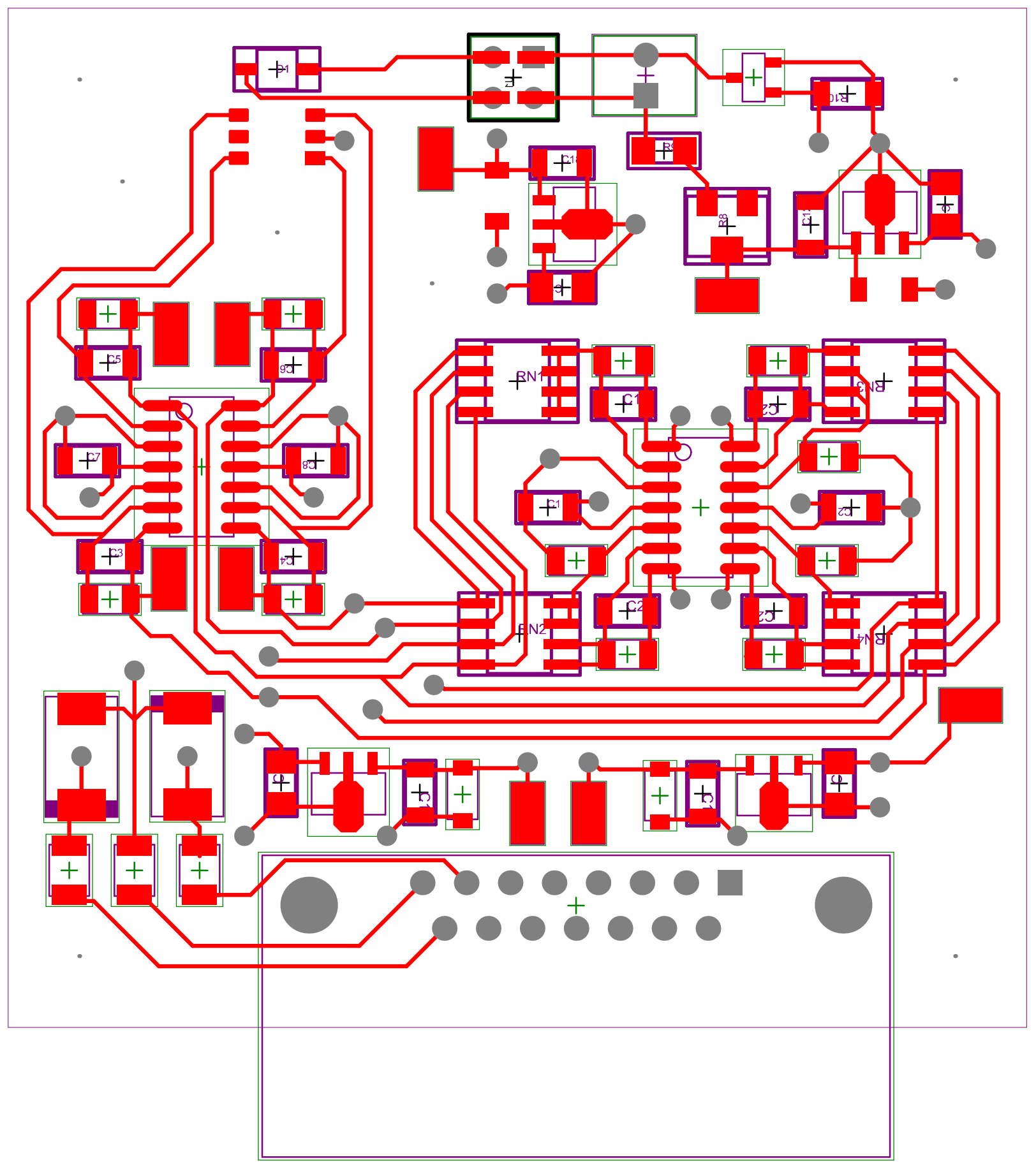

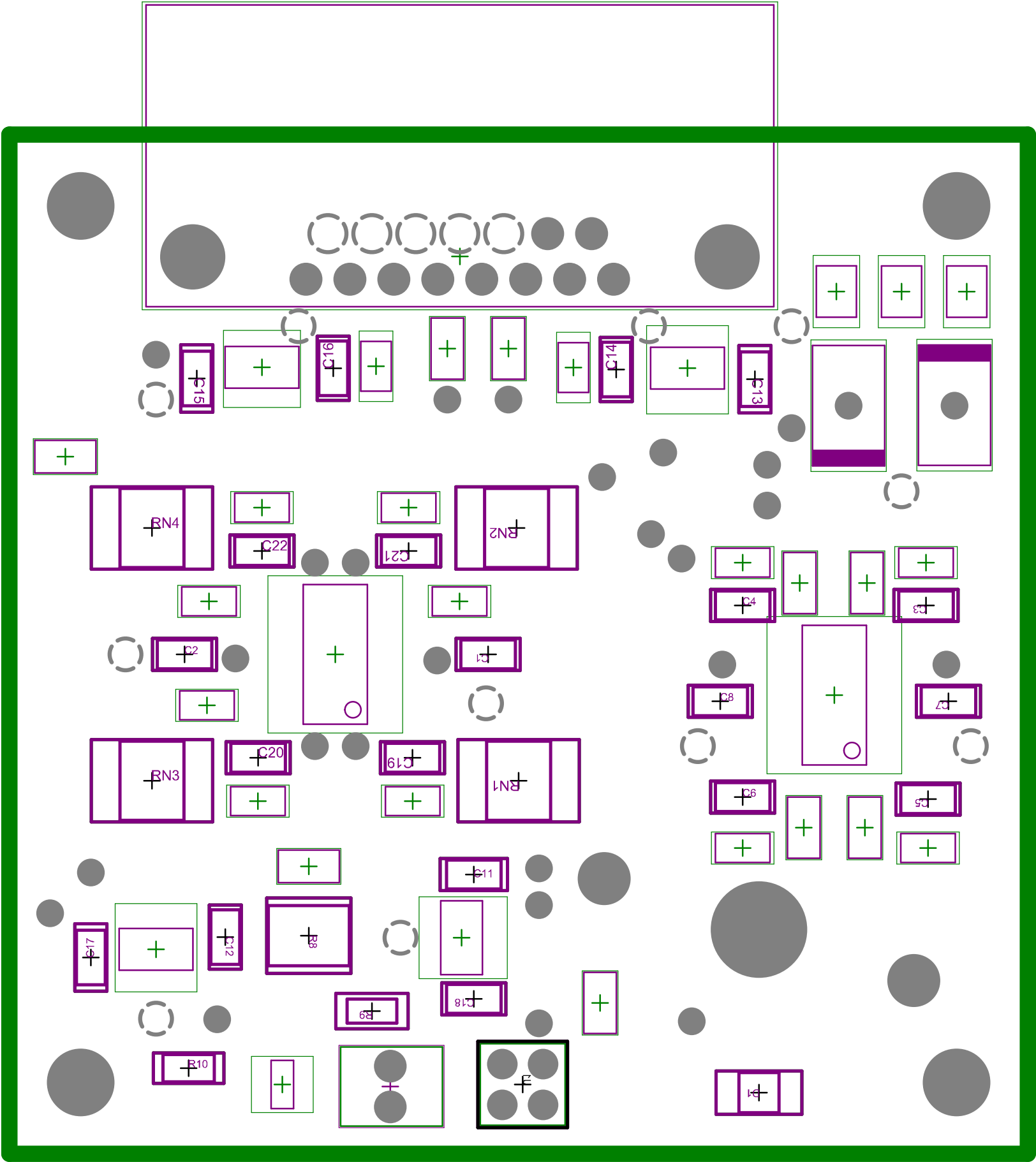
C15
C16
C14
C13
RN4
C22
C21
RN2
C4
C3
C2
C1
C8
C7
RN3
C20
C19
RN1
C6
C5
C11
C17
C12
R8
C18
R9
R10
J1

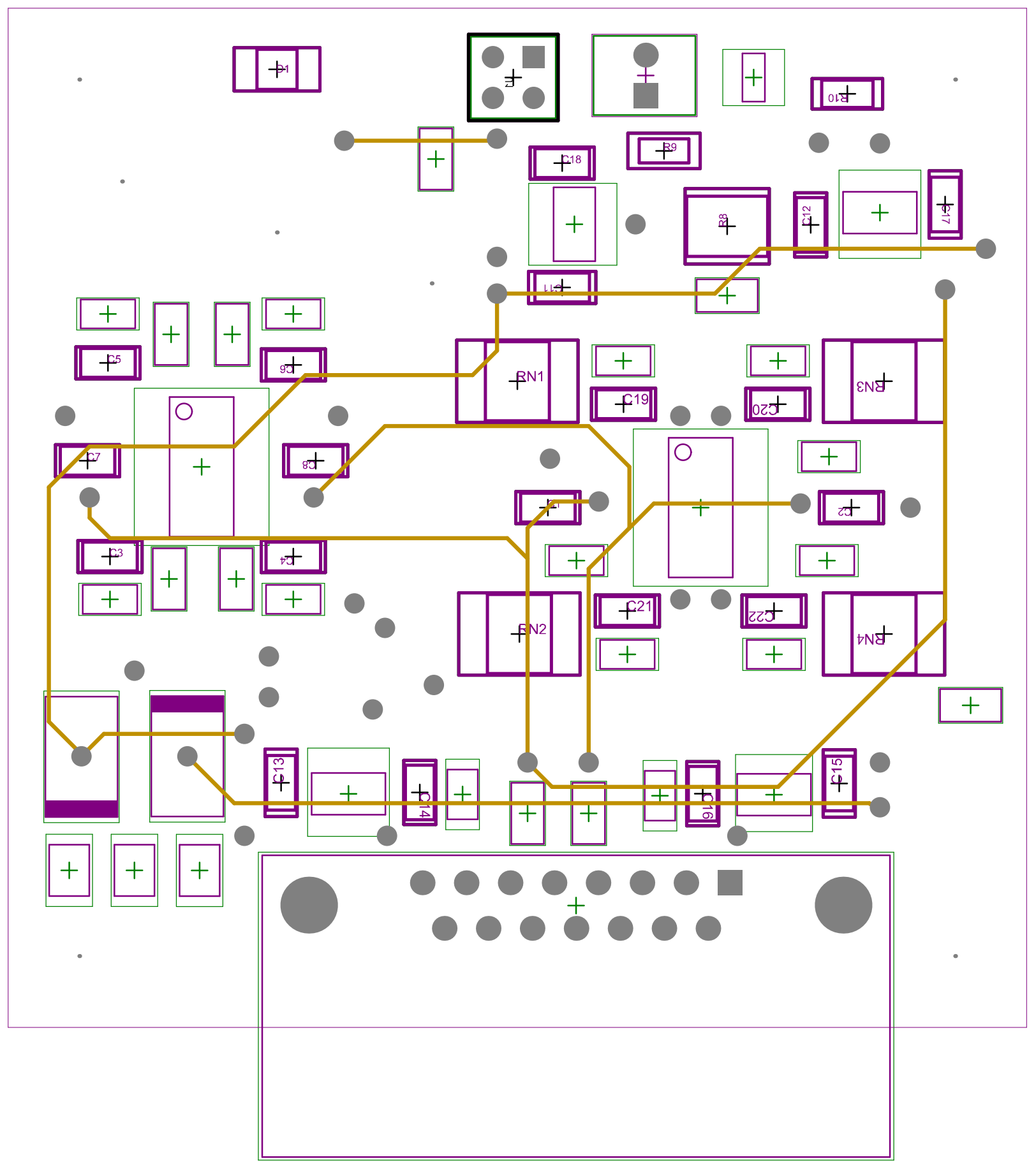
R1
F1
R10
C18
R9
R8
C12
C17
C11
C5
C6
RN1
C19
C20
RN3
C7
C8
C1
C2
C3
C4
C21
C22
RN2
RN4
C13
C14
C16
C15

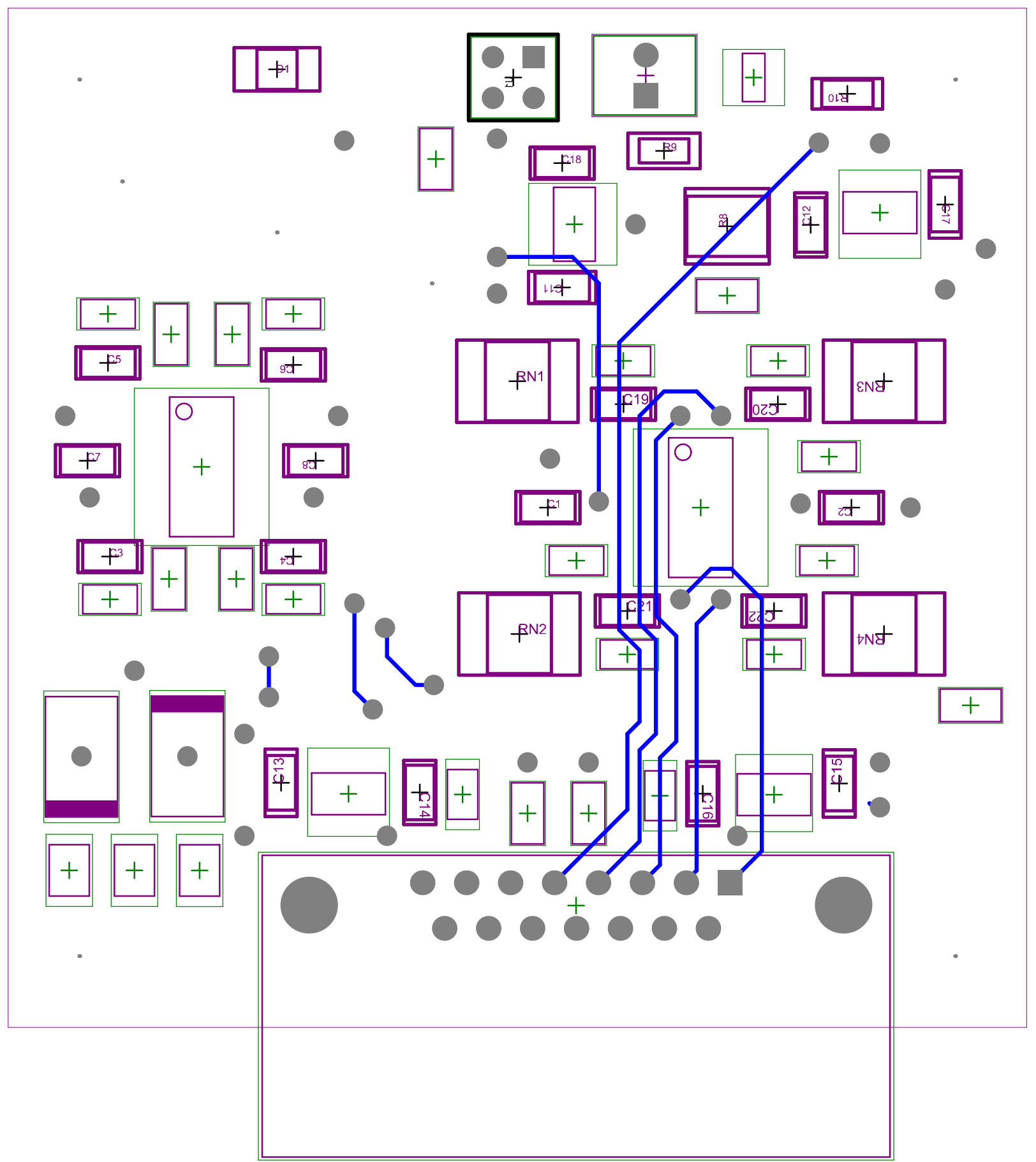
R1
F1
R10
C18
R9
R8
C12
C17
C11
C5
C6
RN1
C19
C20
RN3
C7
C8
C1
C2
C3
C4
RN2
C21
C22
RN4
C13
C14
C16
C15

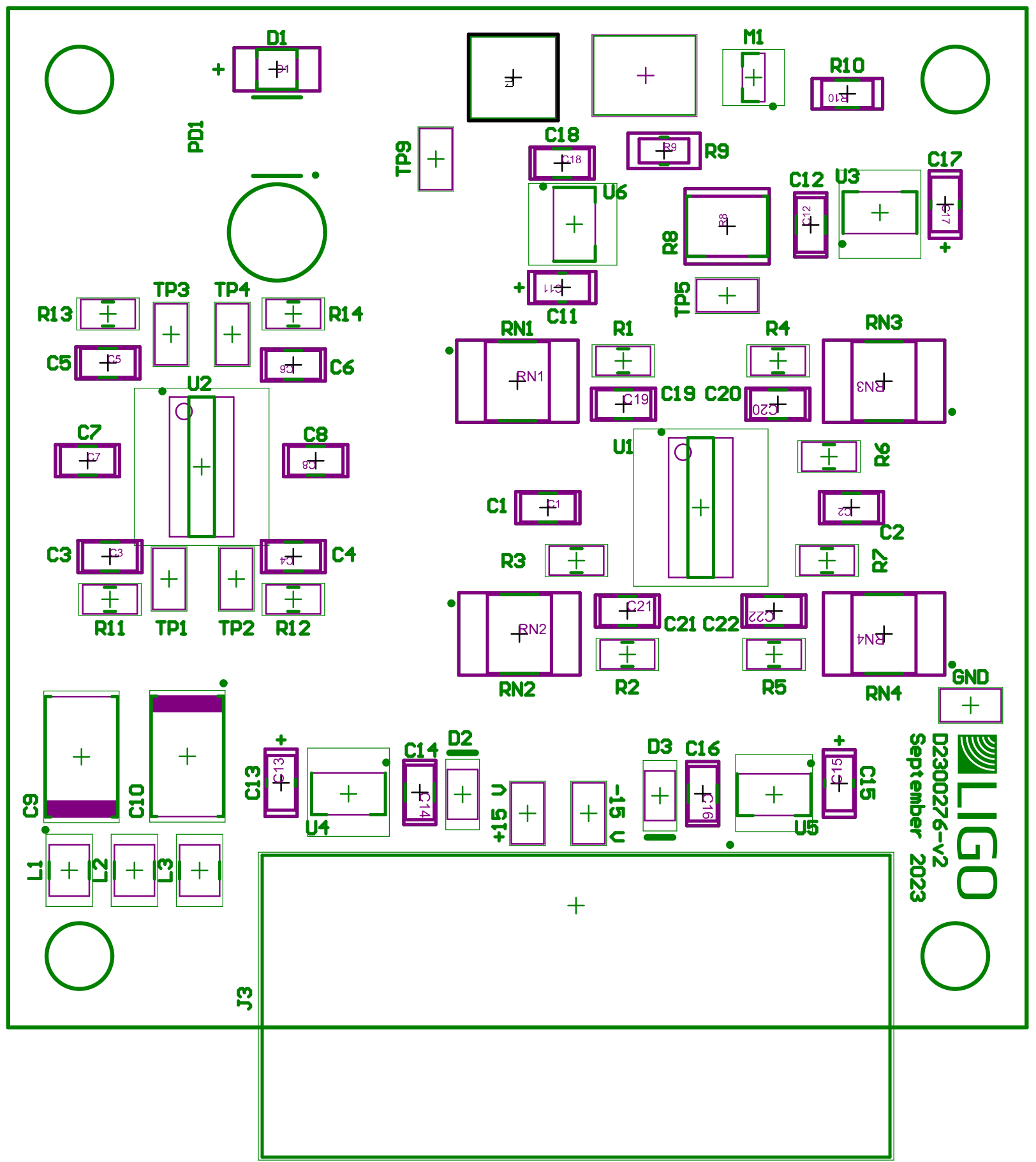
D1
PD1
M1
R10
TP9
C18
R9
U6
C17
C12
U3
R8
TP5
C11
R13
TP3
TP4
R14
C5
C6
U2
RN1
R1
R4
RN3
C19
C20
C7
C8
U1
R6
C1
C2
R3
R7
RN2
C21
C22
RN4
R11
TP1
TP2
R12
R2
R5
GND
C9
C10
C13
U4
C14
D2
+15 V
-15 V
D3
C16
U5
C15
L1
L2
L3
J3
LIGO
D230276-v2
September 2023

J1
J2
R1
R10
R9
C18
R8
C12
C17
C11
C5
C6
C7
C8
C3
C4
RN1
C19
C20
RN3
C1
C2
RN2
C21
C22
RN4
C13
C14
C16
C15

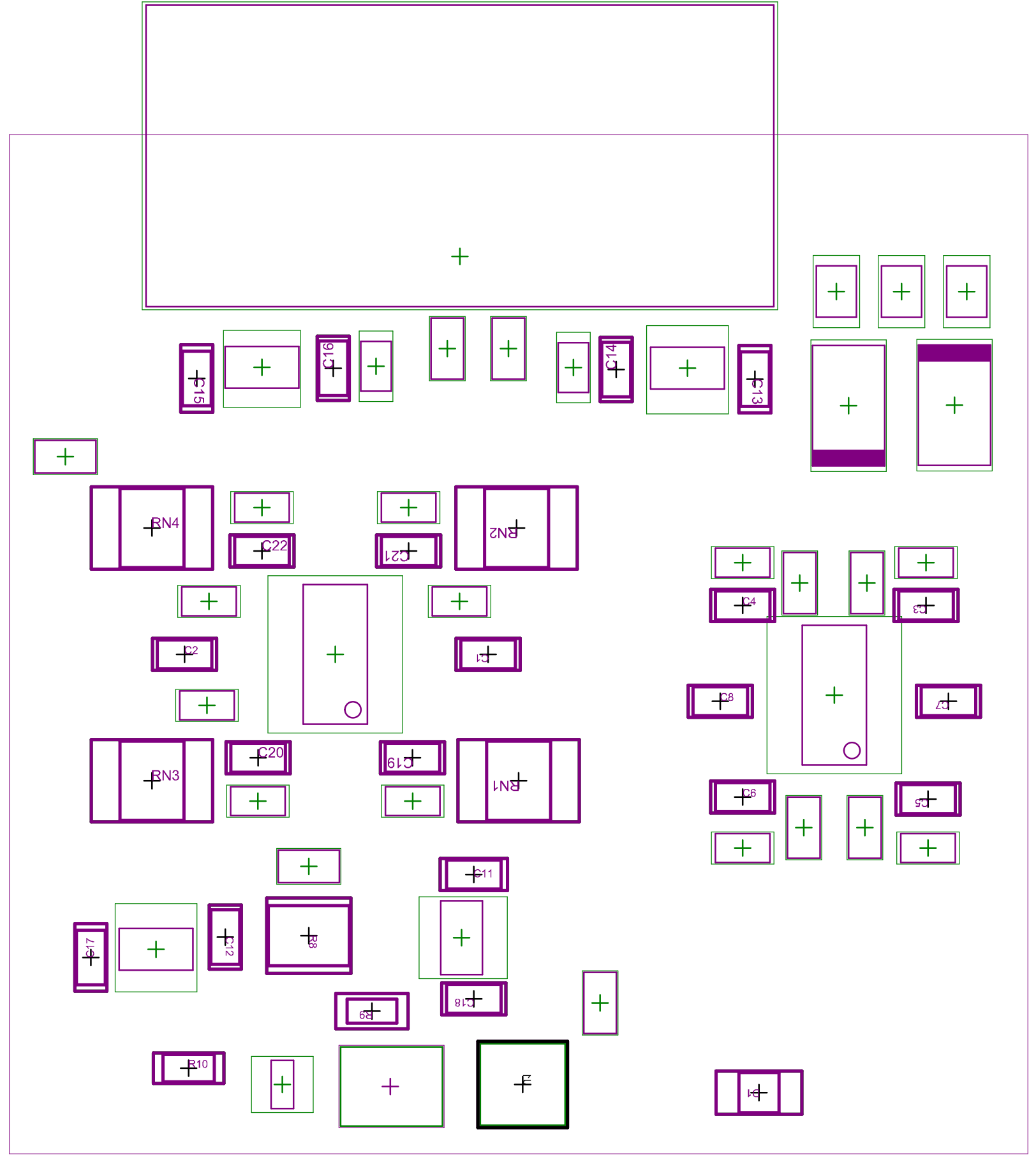
C15
C16
C14
C13
RN4
C22
C21
RN2
C2
C1
C4
C3
C8
C7
RN3
C20
C19
RN1
C6
C5
C17
C12
R8
C11
C18
R9
R10
J1
J2

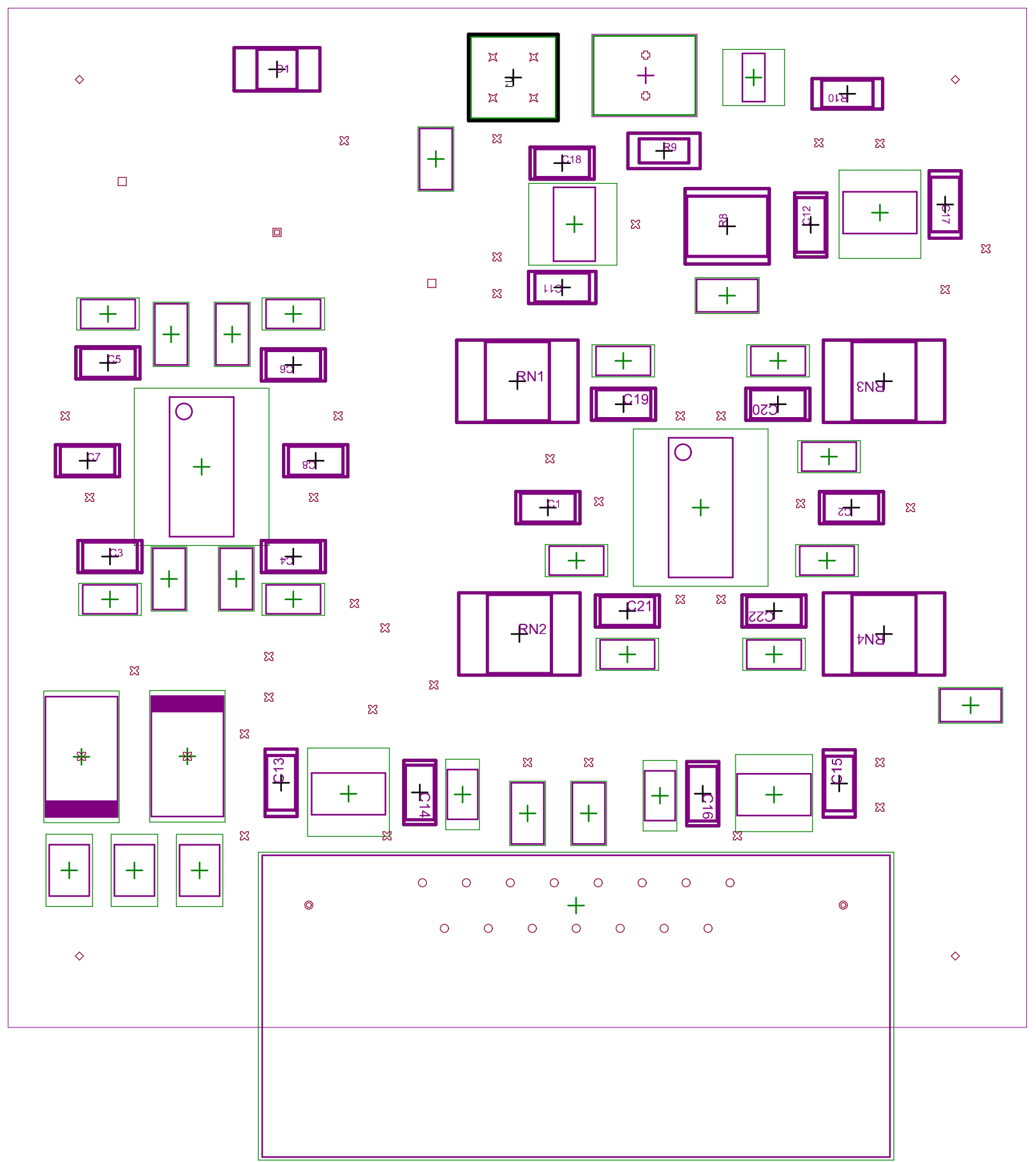
C1
C2
C3
C4
C5
C6
C7
C8
C9
C10
C11
C12
C13
C14
C15
C16
C17
C18
C19
C20
C21
C22
RN1
RN2
RN3
RN4

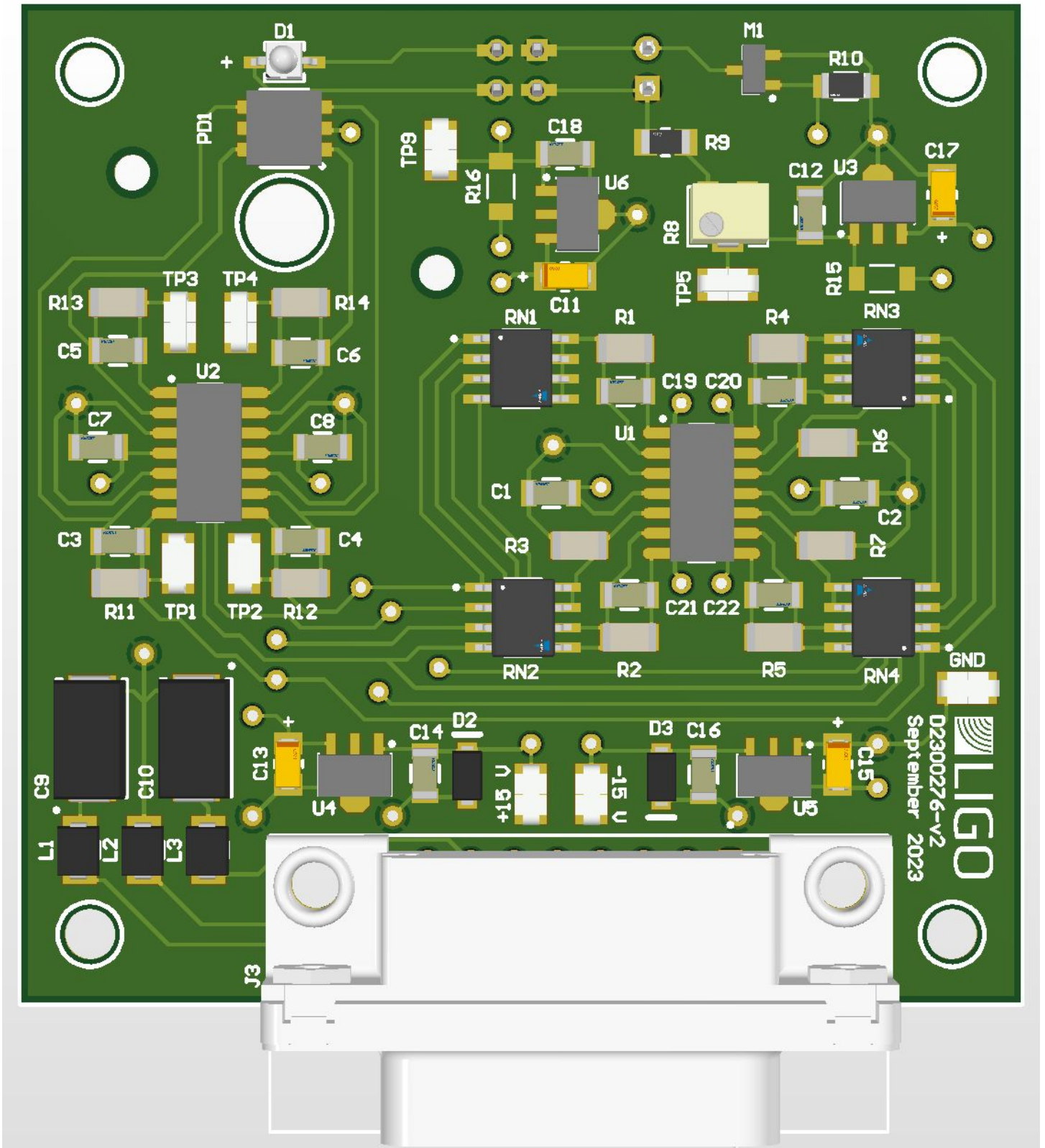
D1
PD1
M1
R10
TP9
C18
R9
R16
U6
C12
U3
C17
R8
TP5
R15
C11
TP3
TP4
R13
R14
C5
C6
U2
C7
C8
C3
C4
R11
TP1
TP2
R12
RN1
R1
R4
RN3
C19
C20
U1
C1
R6
C2
R3
R7
C21
C22
RN2
R2
R5
RN4
GND
C9
C10
C13
C14
D2
D3
C16
C15
U4
U5
+15 V
-15 V
L1
L2
L3
J3
LIGO
D2300276-v2
September 2023

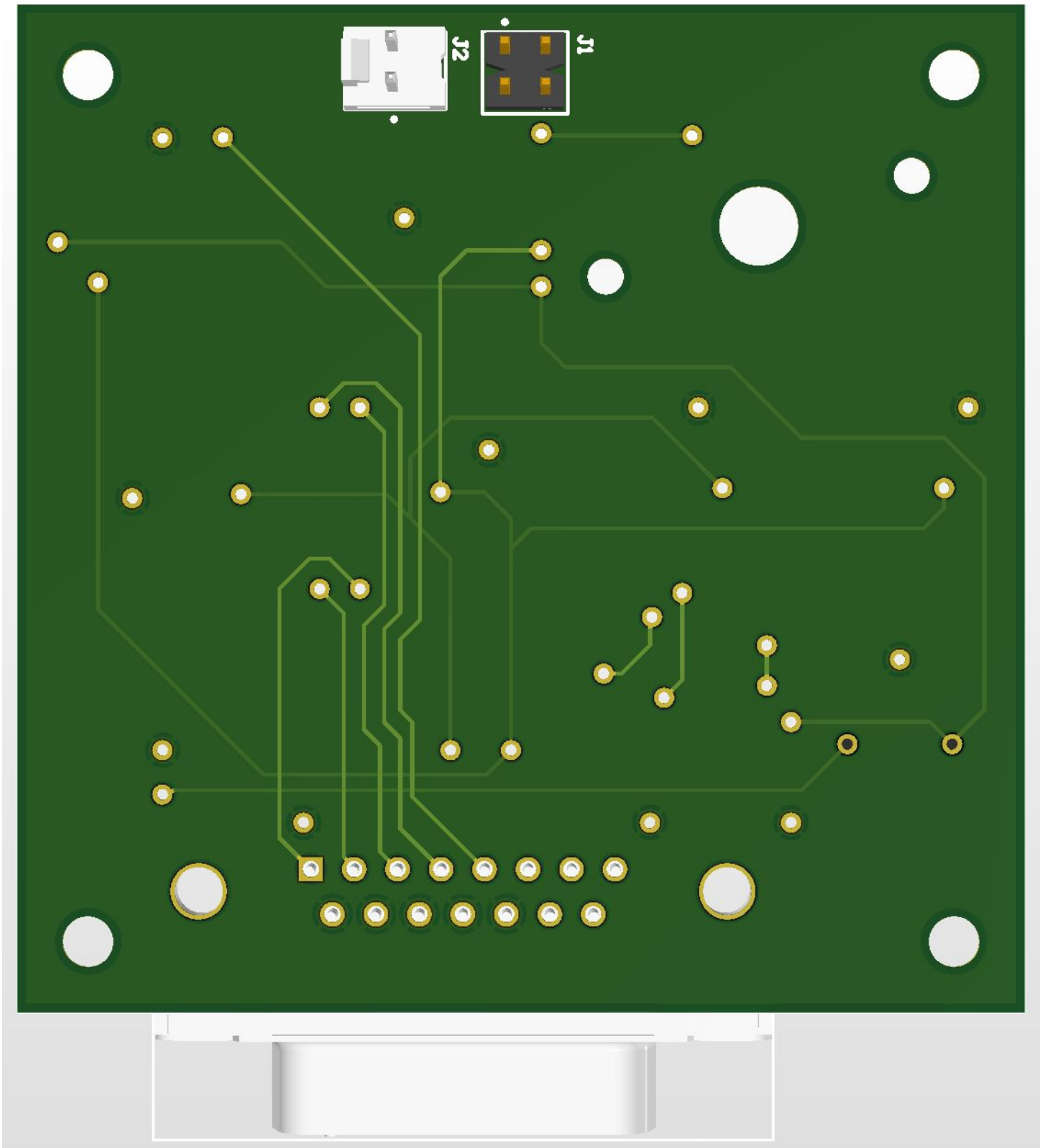
J2
J1