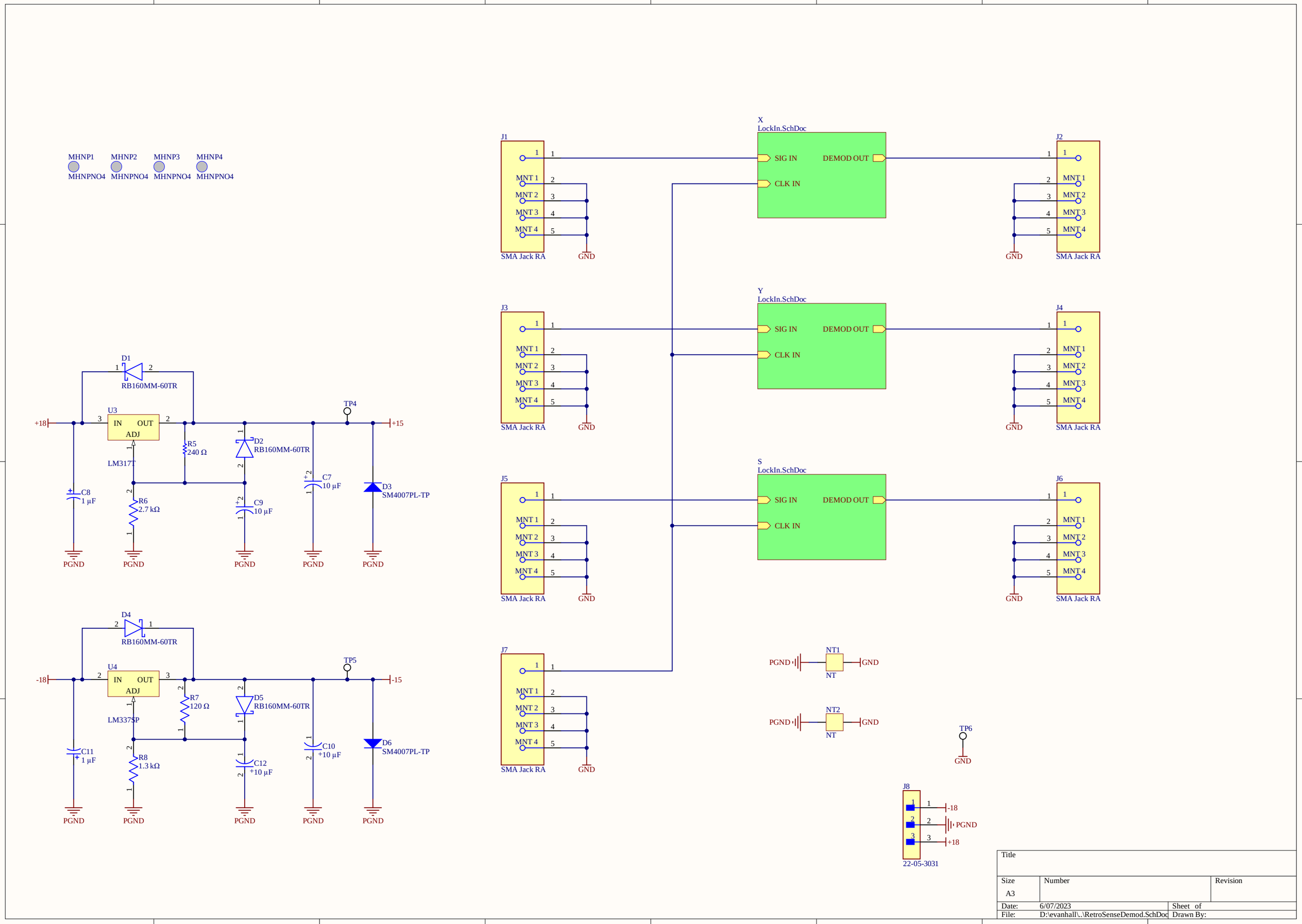

Title		
Size A3	Number	Revision
Date: 6/07/2023		Sheet of
File: D:\evanhall\..\RetroSenseDemod.SchDoc		Drawn By:

Lock-in demodulator:
see Fig. 35 of AD630 datasheet

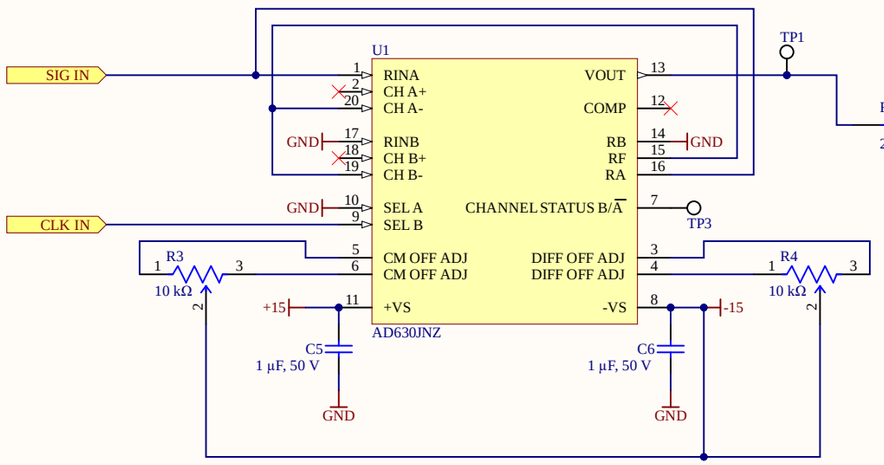

Sallen-Key low-pass filter:
dc gain 0 dB, 2 poles at 290 Hz

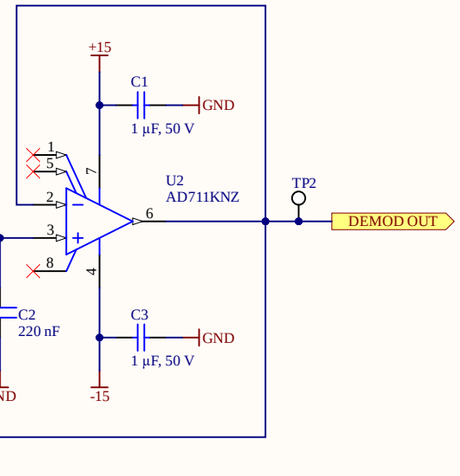

Title		
Size: A3	Number:	Revision:
Date: 6/07/2023		Sheet of
File: D:\evanhall\..\LockIn.SchDoc		Drawn By:

CLK IN
X IN
X OUT
Y IN
Y OUT
S IN
S OUT
U1_X
U1_Y
U1_S
R4_X
R4_Y
R4_S
R3_X
R3_Y
R3_S
TP1_X
TP1_Y
TP1_S
TP3_X
TP3_Y
TP3_S
C6_X
C6_Y
C6_S
C7_X
C7_Y
C7_S
C4_X
C4_Y
C4_S
U2_X
U2_Y
U2_S
R2_X
R1_X
R2_Y
R1_Y
R2_S
R1_S
C5_X
C5_Y
C5_S
C2_X
C2_Y
C2_S
C3_X
C3_Y
C3_S
TP2_X
TP2_Y
TP2_S
TP5
-15 V
D6
D5
R7
U4
D4
TP6
D1
U3
R5
D2
D3
+15 V
TP4
J8
C10
C12
R8
C11
C8
R6
C9
C7

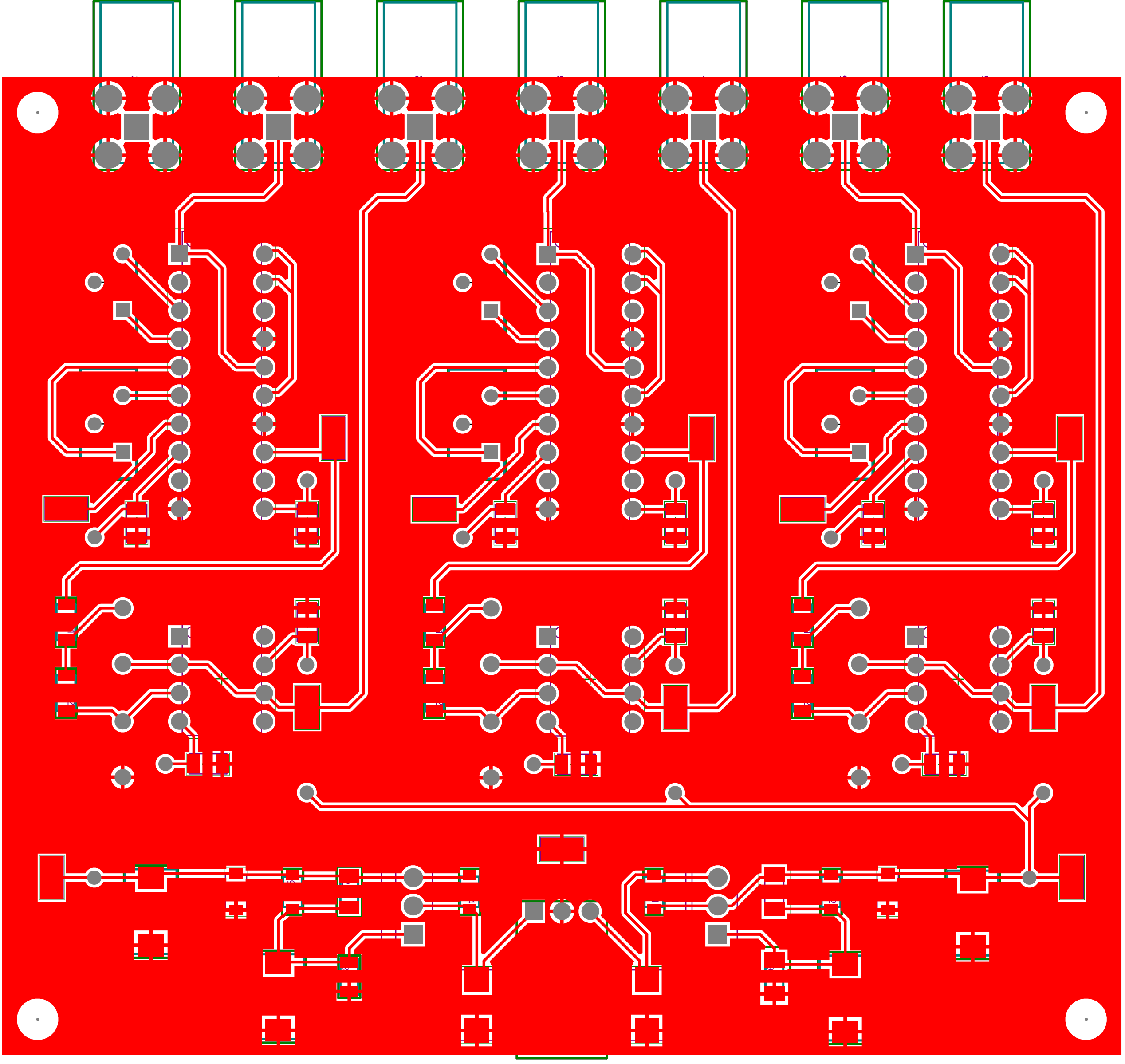

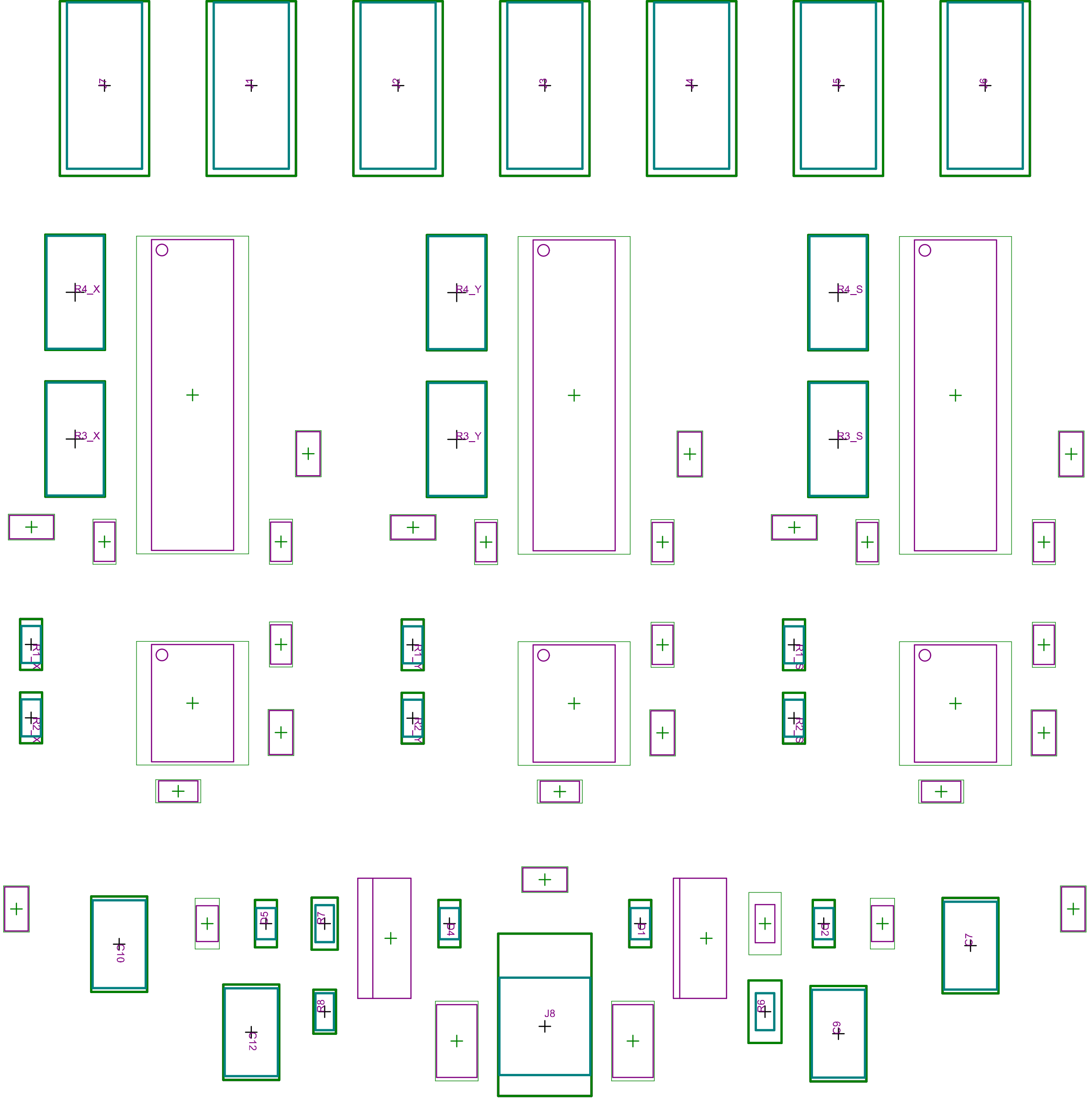

R4_X
R3_X
R4_Y
R3_Y
R4_S
R3_S
R1_X
R2_X
R1_Y
R2_Y
R1_S
R2_S
C10
C12
R7
R8
D4
J8
D1
D2
R9
J7

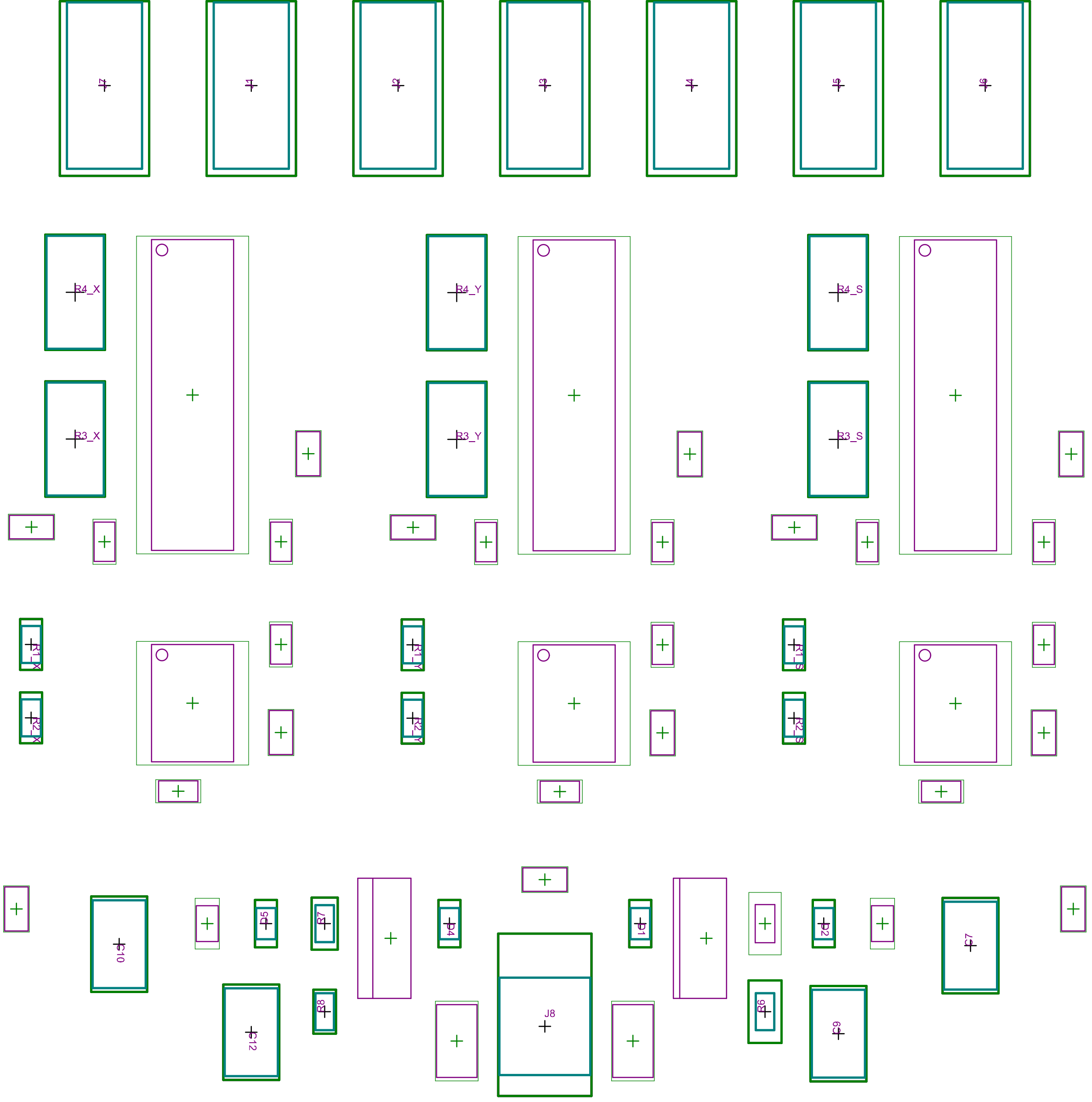

R4_X
R3_X
R4_Y
R3_Y
R4_S
R3_S
R1_X
R2_X
R1_Y
R2_Y
R1_S
R2_S
C10
C12
R7
R8
D4
J8
D1
D2
R9
J7

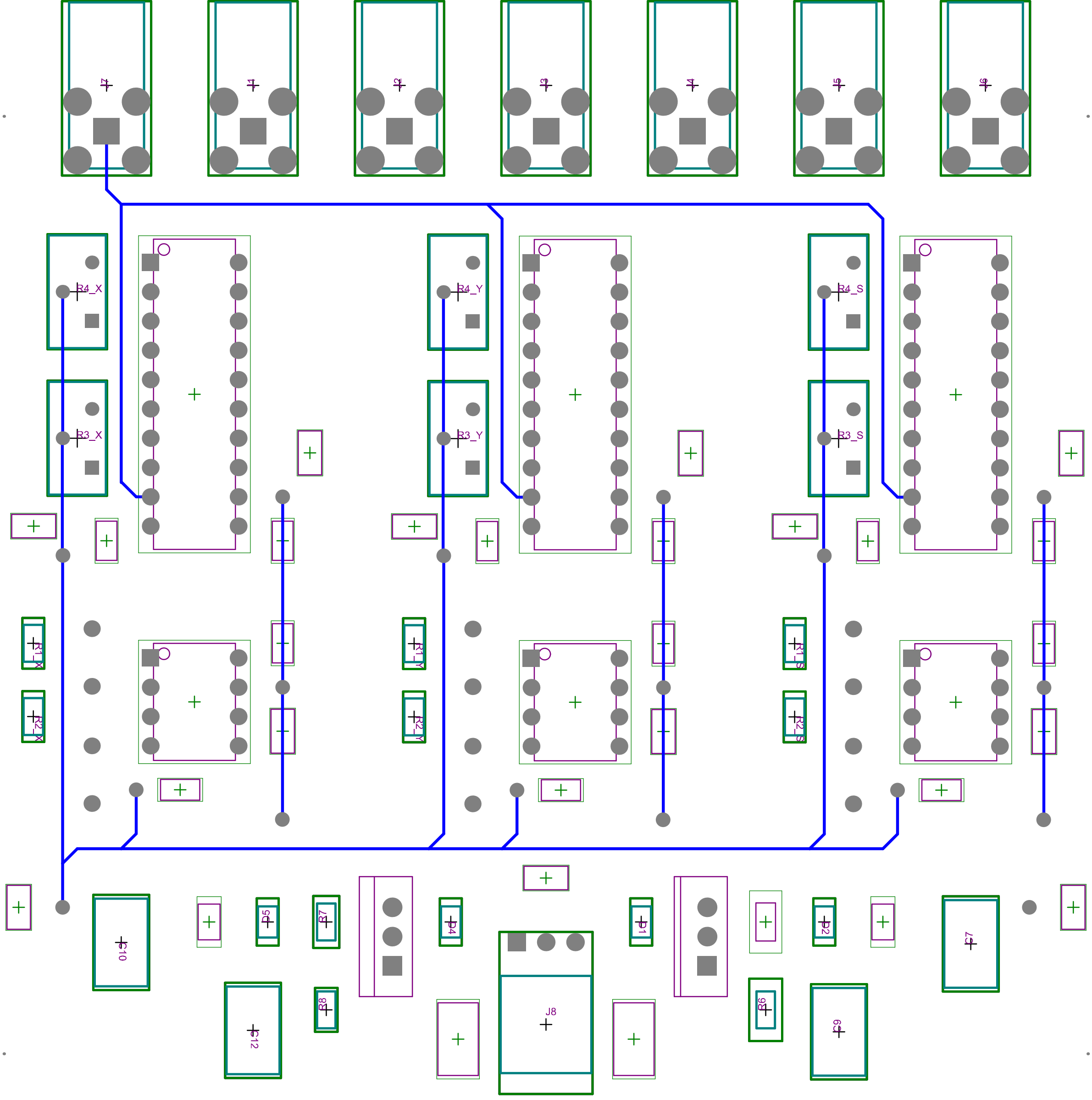

R4_X
R3_X
R4_Y
R3_Y
R4_S
R3_S
R1_X
R2_X
R1_Y
R2_Y
R1_S
R2_S
C10
C12
D5
R7
R8
D4
J8
D1
D2
R9
C9
J7

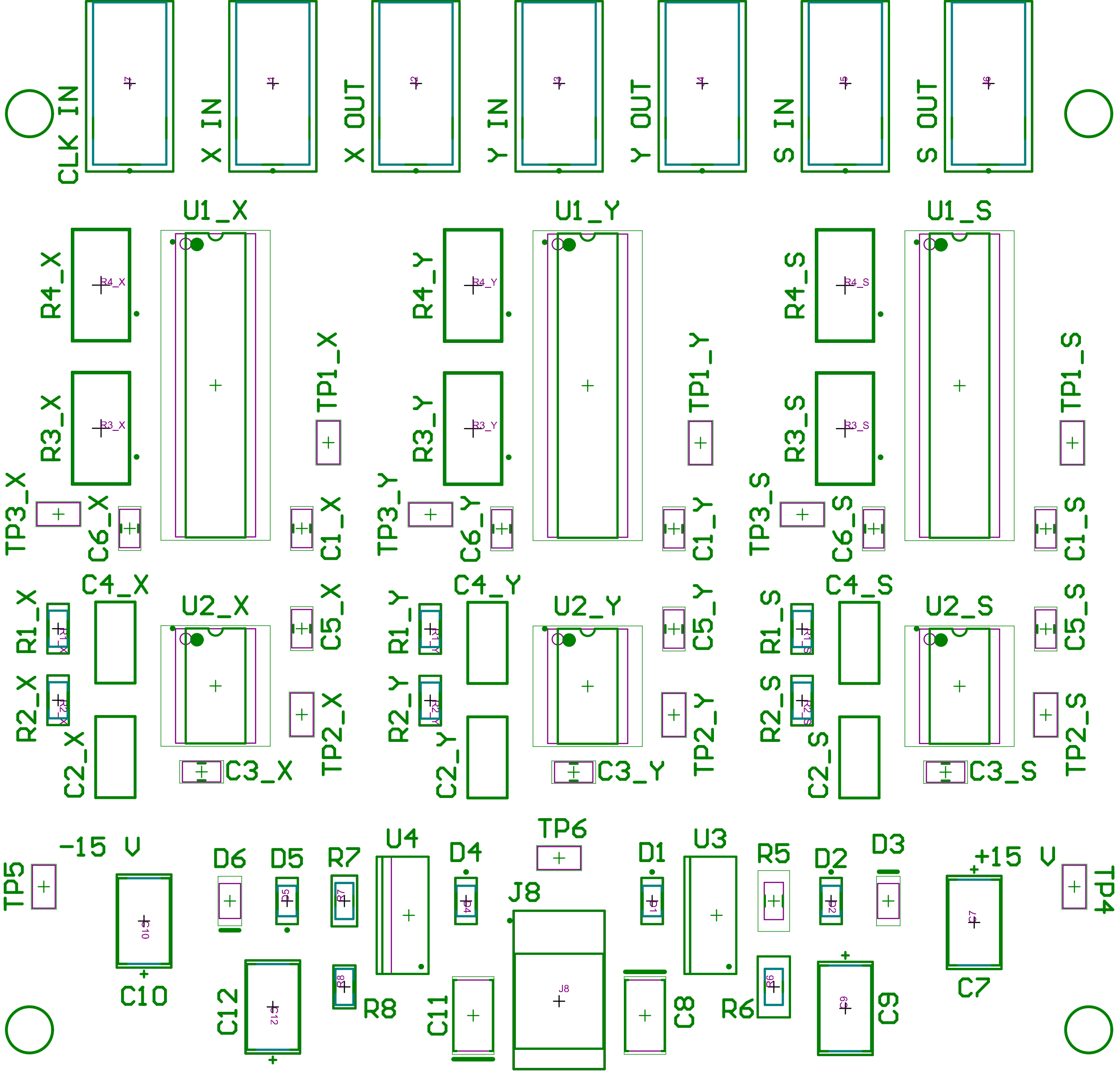
CLK IN
X IN
X OUT
Y IN
Y OUT
S IN
S OUT
U1_X
U1_Y
U1_S
R4_X
R3_X
R4_Y
R3_Y
R4_S
R3_S
TP1_X
TP1_Y
TP1_S
TP3_X
TP3_Y
TP3_S
C6_X
C6_Y
C6_S
C1_X
C1_Y
C1_S
C4_X
C4_Y
C4_S
U2_X
U2_Y
U2_S
R1_X
R2_X
R1_Y
R2_Y
R1_S
R2_S
C5_X
C5_Y
C5_S
TP2_X
TP2_Y
TP2_S
C2_X
C2_Y
C2_S
C3_X
C3_Y
C3_S
-15 V
+15 V
TP5
TP4
TP6
D6
D5
R7
U4
D4
J8
D1
U3
R5
D2
D3
C10
C12
R8
C11
C8
R6
C9
C7

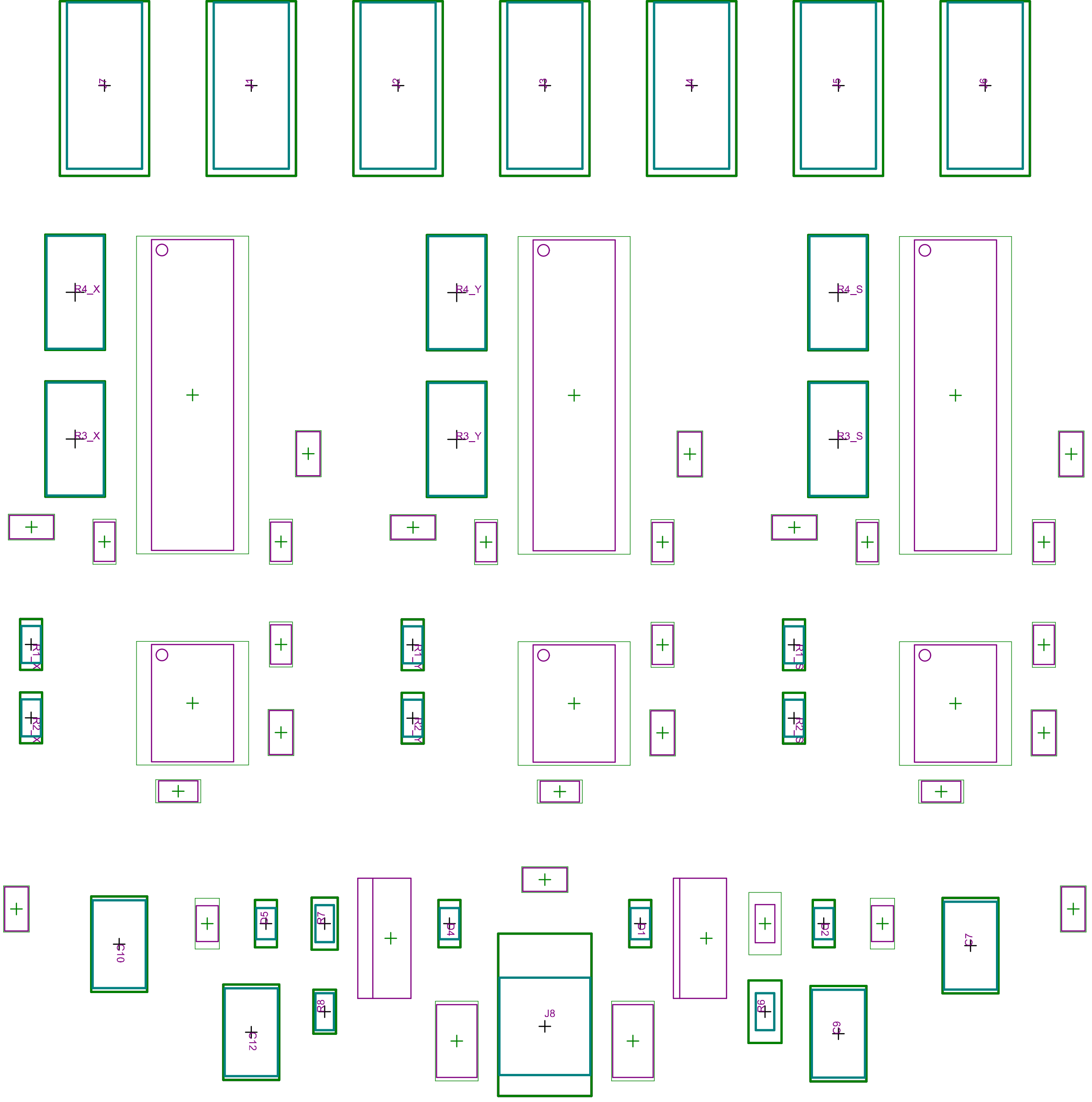

R4_X
R3_X
R4_Y
R3_Y
R4_S
R3_S
R1_X
R2_X
R1_Y
R2_Y
R1_S
R2_S
C10
C12
R7
R8
D4
J8
D1
D2
R9
J7

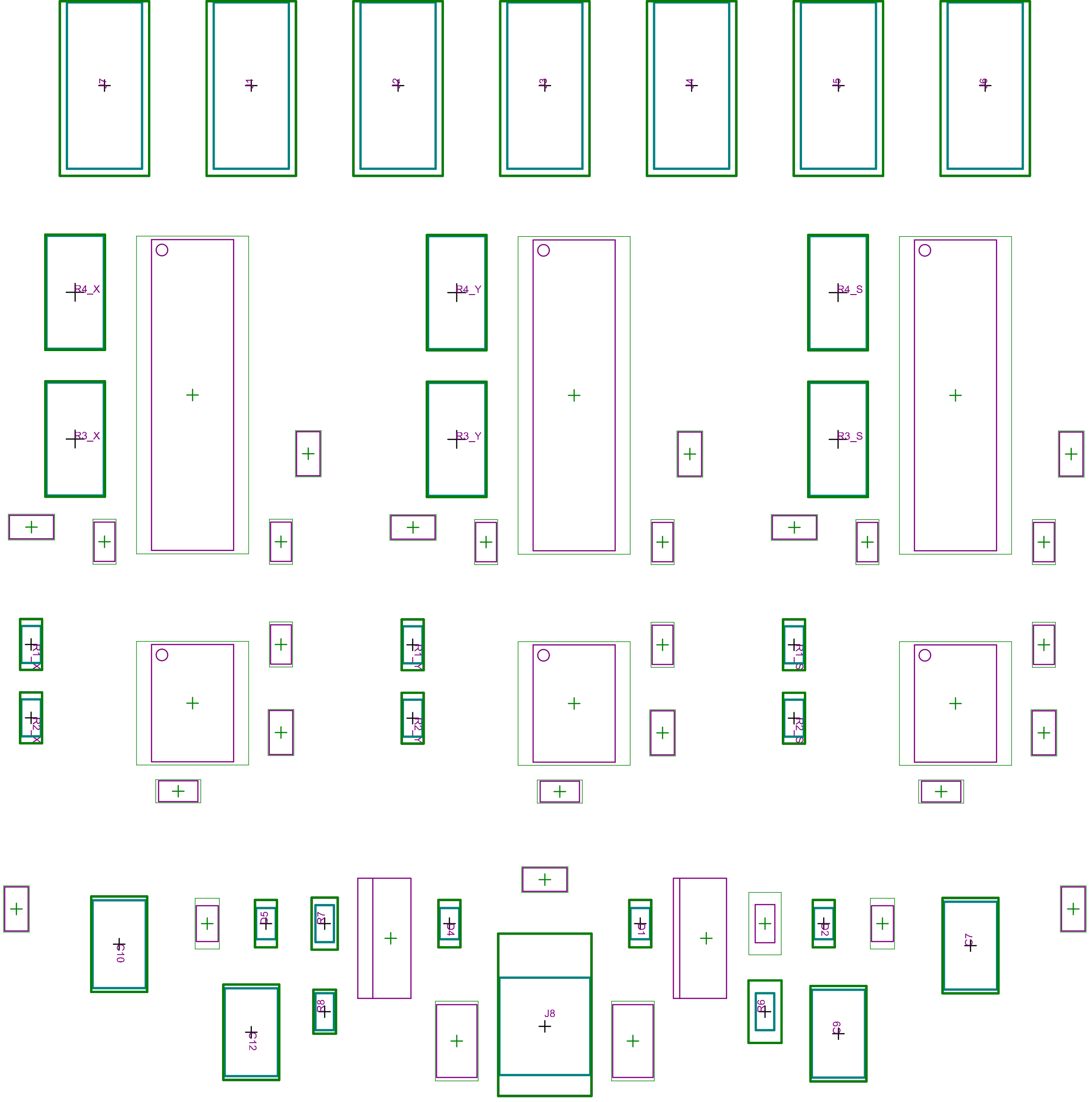

R4_X
R3_X
R4_Y
R3_Y
R4_S
R3_S
R1_X
R2_X
R1_Y
R2_Y
R1_S
R2_S
C10
C12
R7
R8
D4
J8
D1
D2
R9
J7

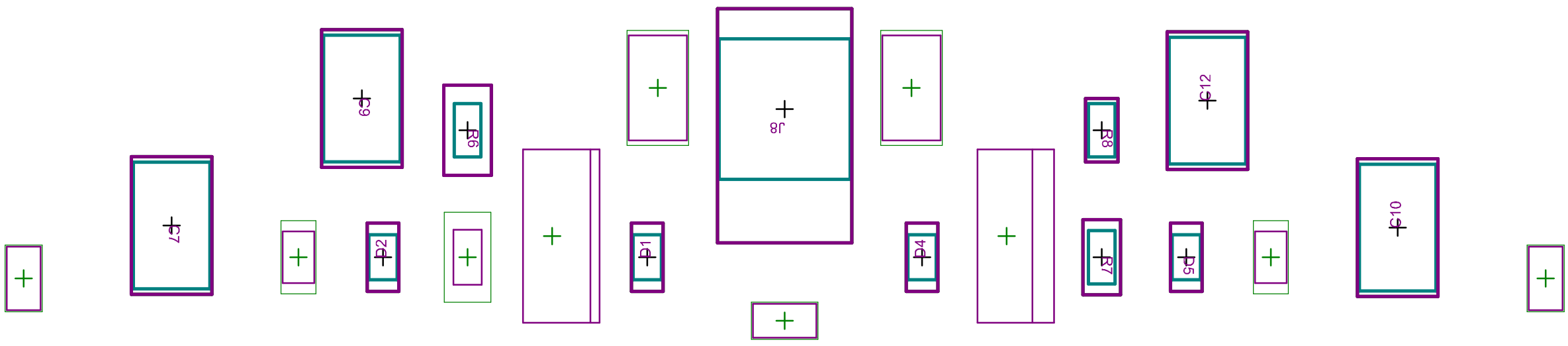
C7
C9
R6
J2
J1
J8
J4
R8
C12
R7
R5
C10

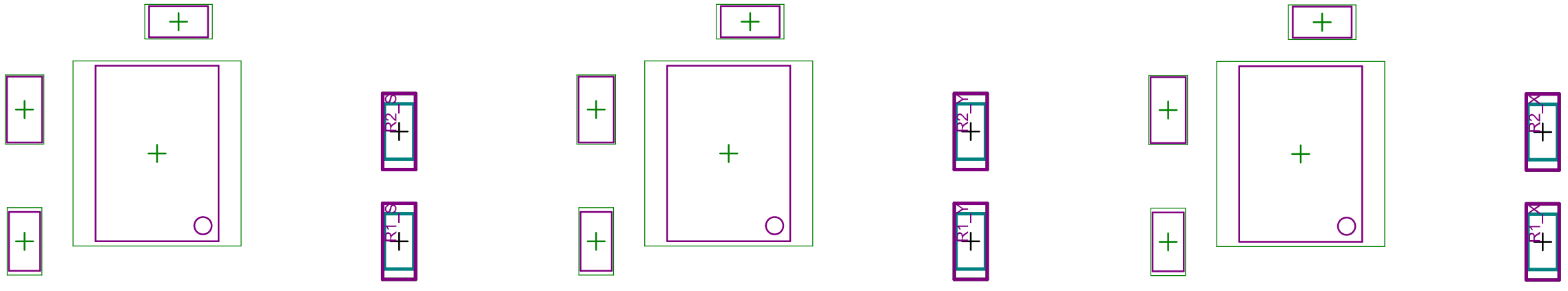
R2_S
R1_S
R2_Y
R1_Y
R2_X
R1_X

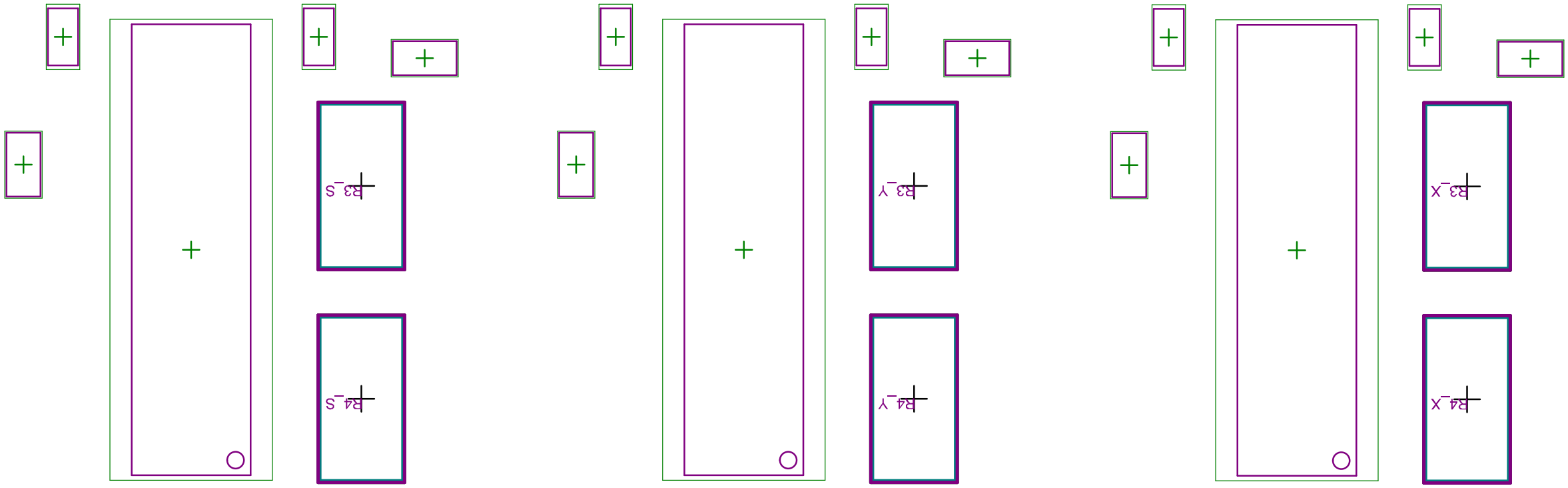
B3_S
B4_S
B3_Y
B4_Y
B3_X
B4_X

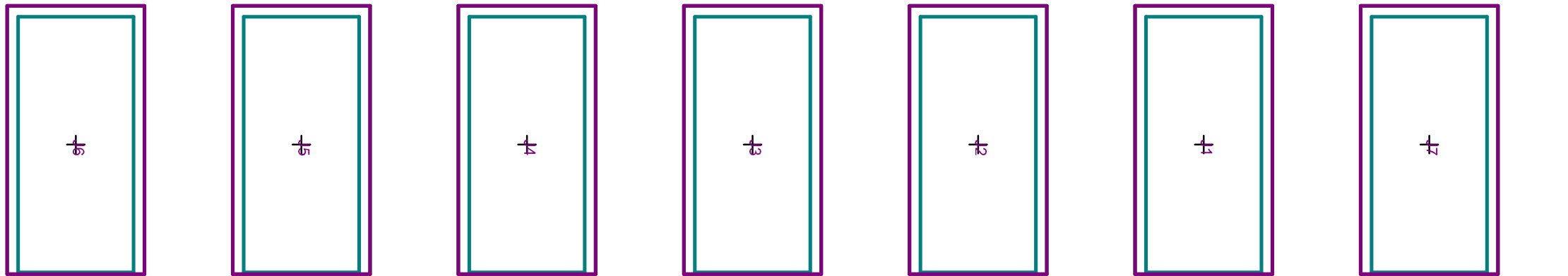
C6
C5
C4
C3
C2
C1
C0

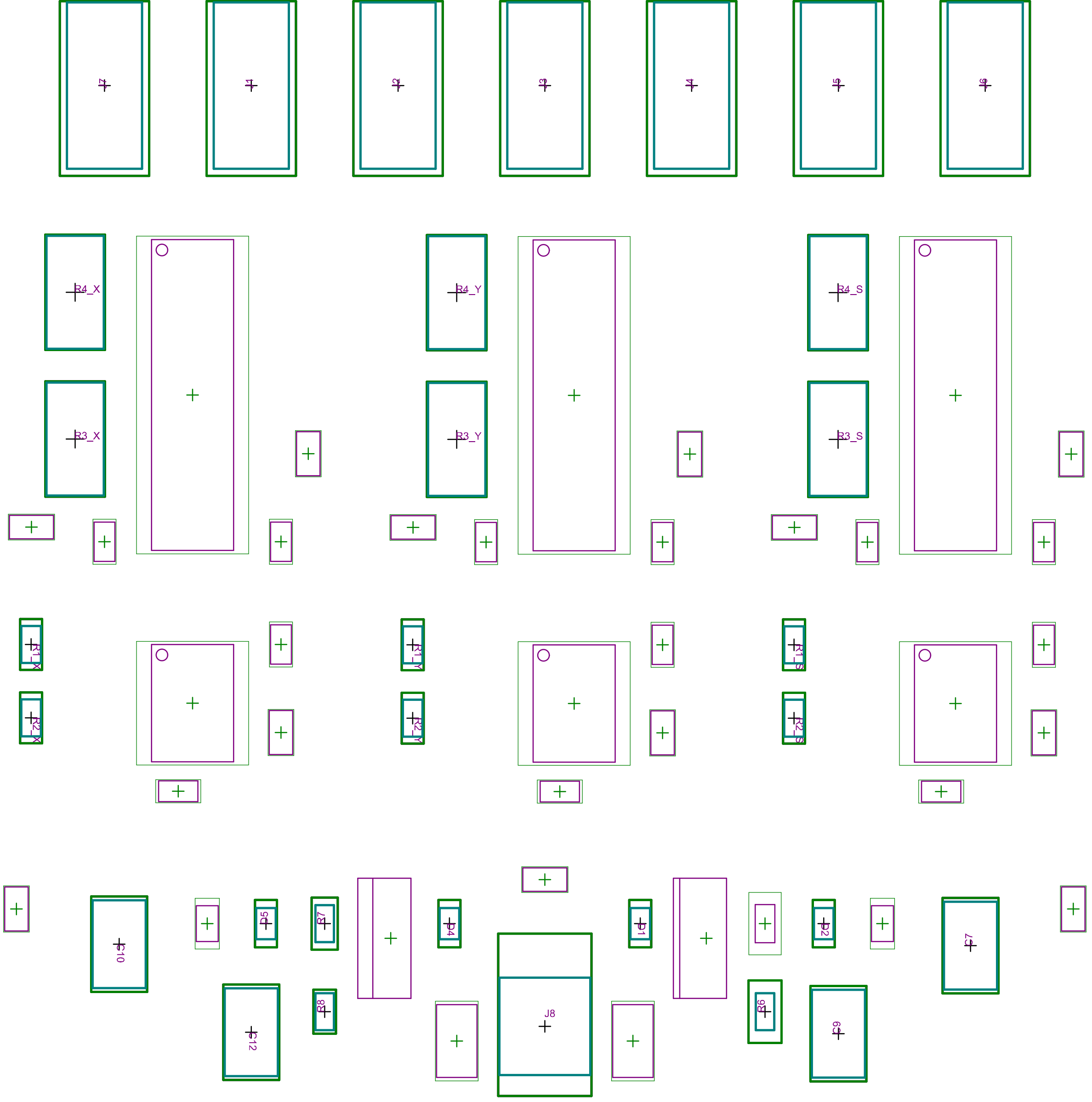

R4_X
R3_X
R4_Y
R3_Y
R4_S
R3_S
R1_X
R2_X
R1_Y
R2_Y
R1_S
R2_S
C10
C12
R7
R8
D4
J8
D1
D2
R9
J7

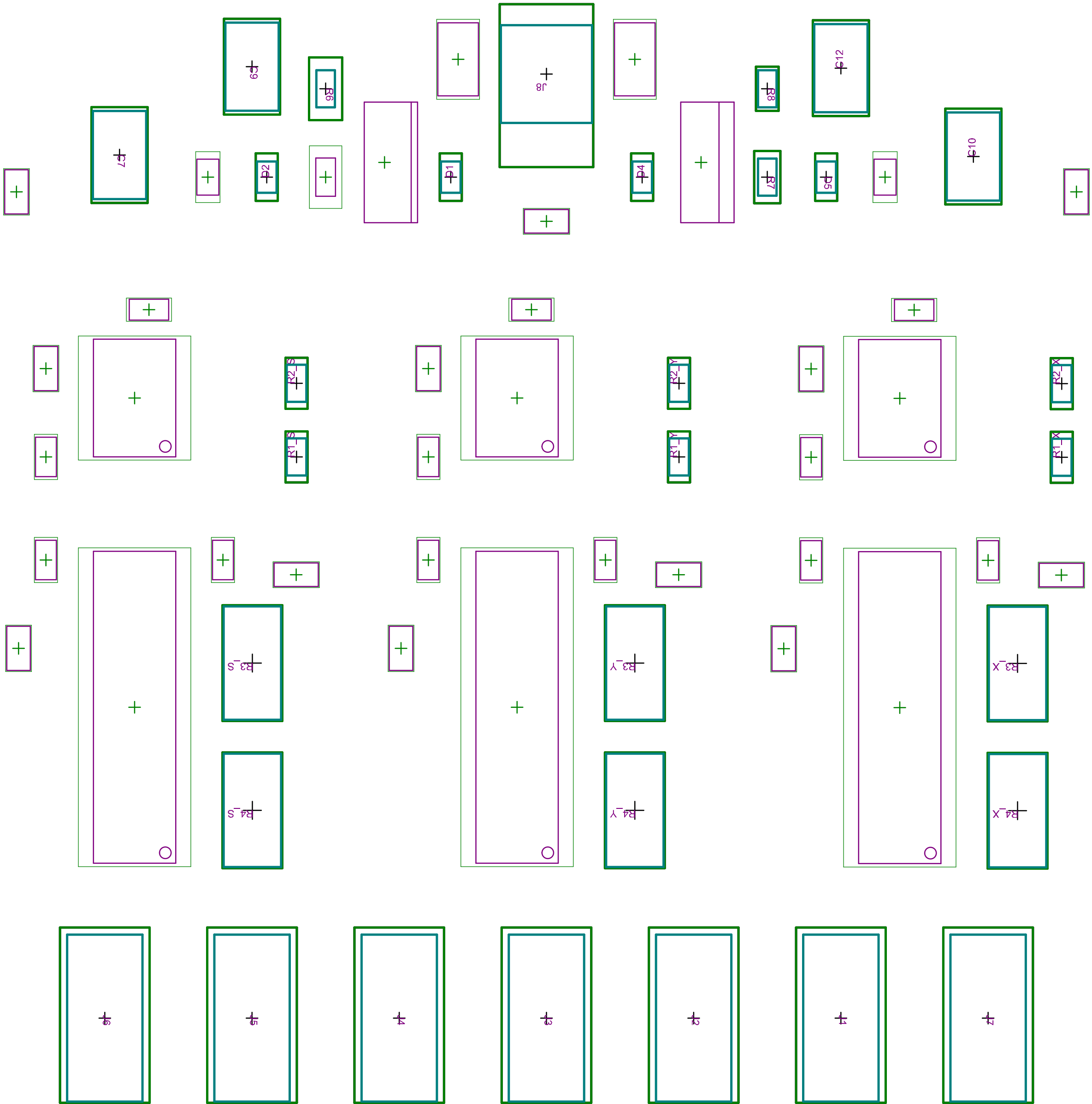
C9
R6
J8
C12
R8
C7
D2
D1
D4
R7
D5
C10
R2_S
R1_S
R2_Y
R1_Y
R2_X
R1_X
R3_S
R4_S
R3_Y
R4_Y
R3_X
R4_X
C6
C5
C4
C3
C2
C1
C7

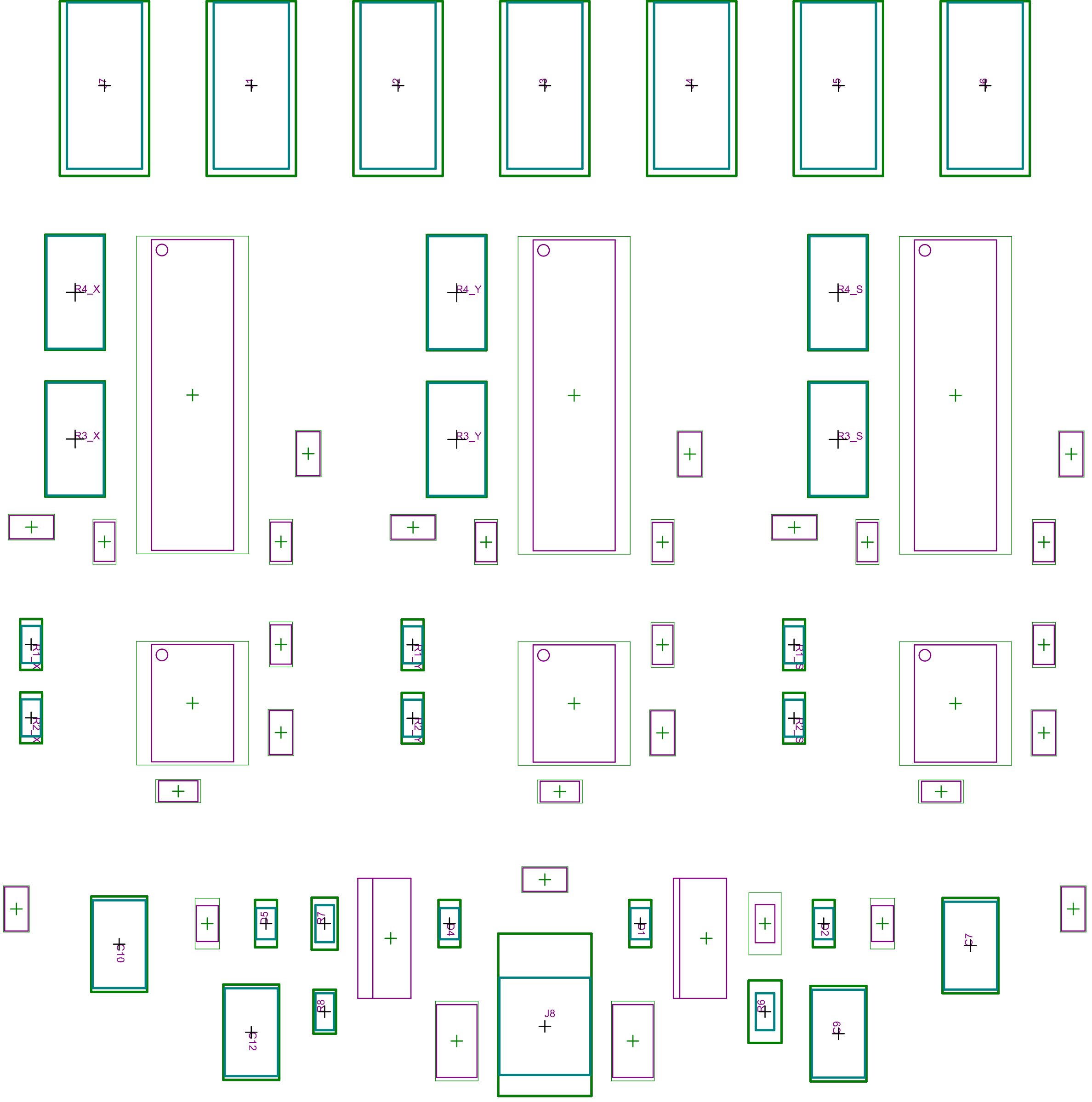

R4_X
R3_X
R4_Y
R3_Y
R4_S
R3_S
R1_X
R2_X
R1_Y
R2_Y
R1_S
R2_S
C10
C12
R7
R8
D4
J8
D1
D2
R9
J7

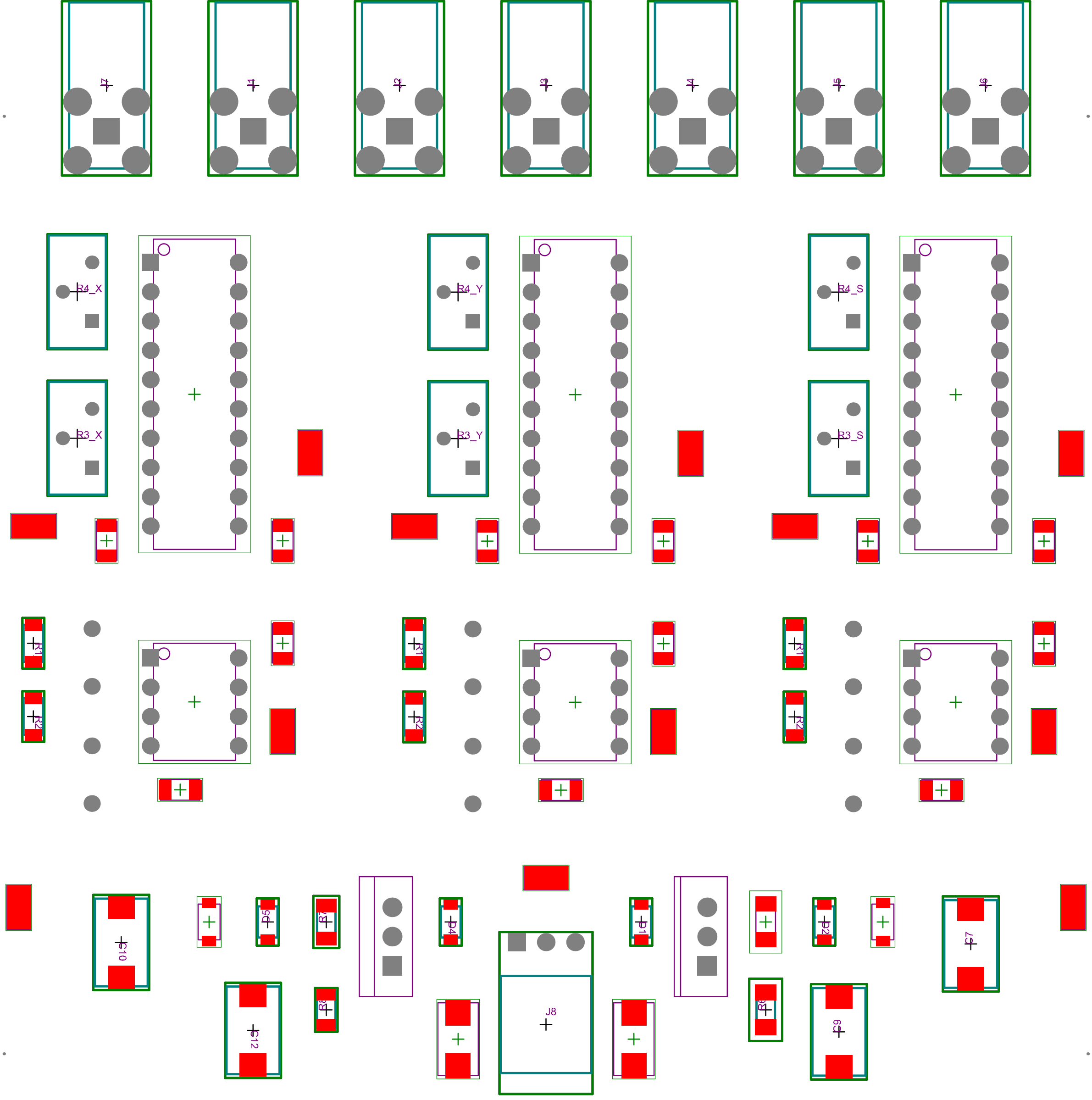

R4_X
R3_X
R4_Y
R3_Y
R4_S
R3_S
J8

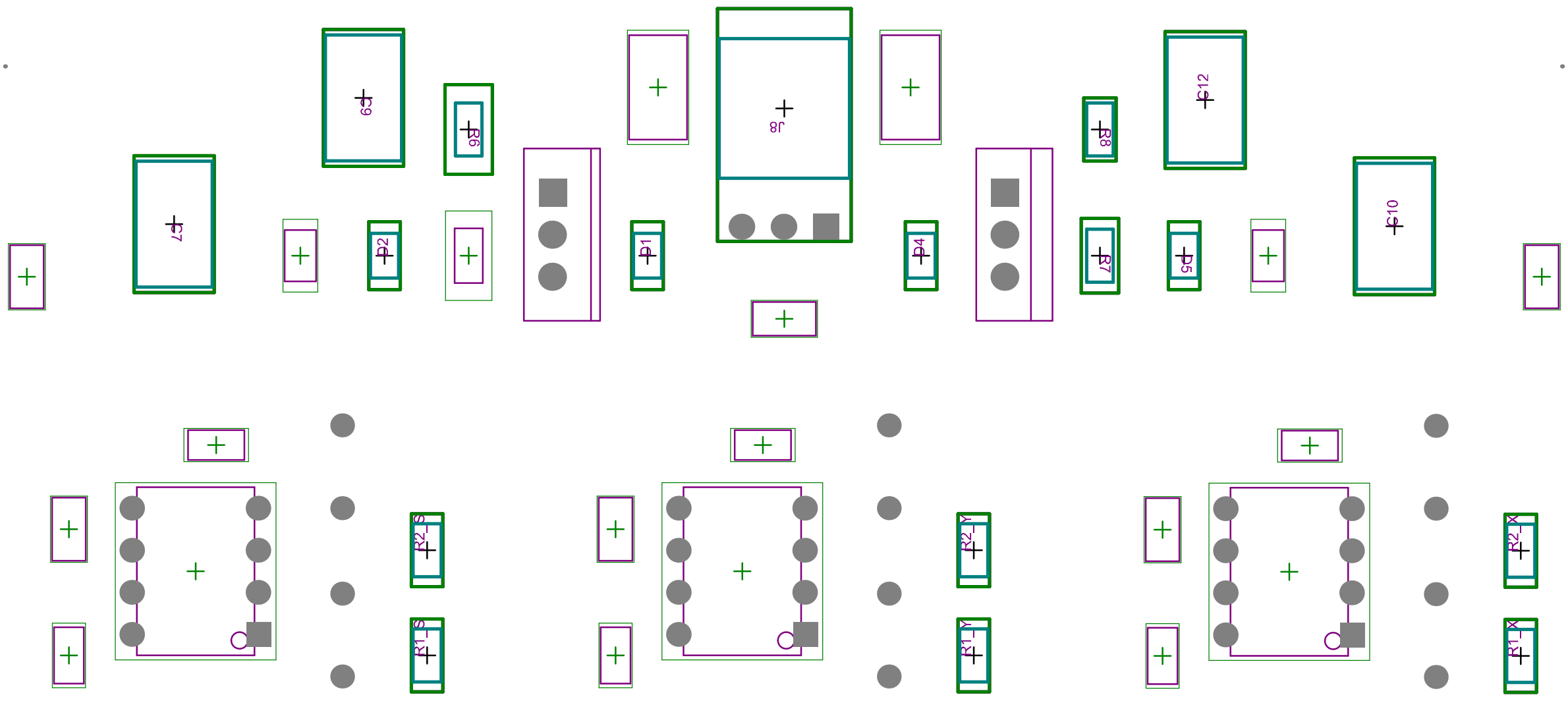
C7
C9
R6
J2
R1
J8
R4
C12
R8
R7
R5
C10
R2_S
R1_S
R2_Y
R1_Y
R2_X
R1_X
B3_S
B4_S
B3_Y
B4_Y
B3_X
B4_X
J9
J5
J7
J3
J4
J1

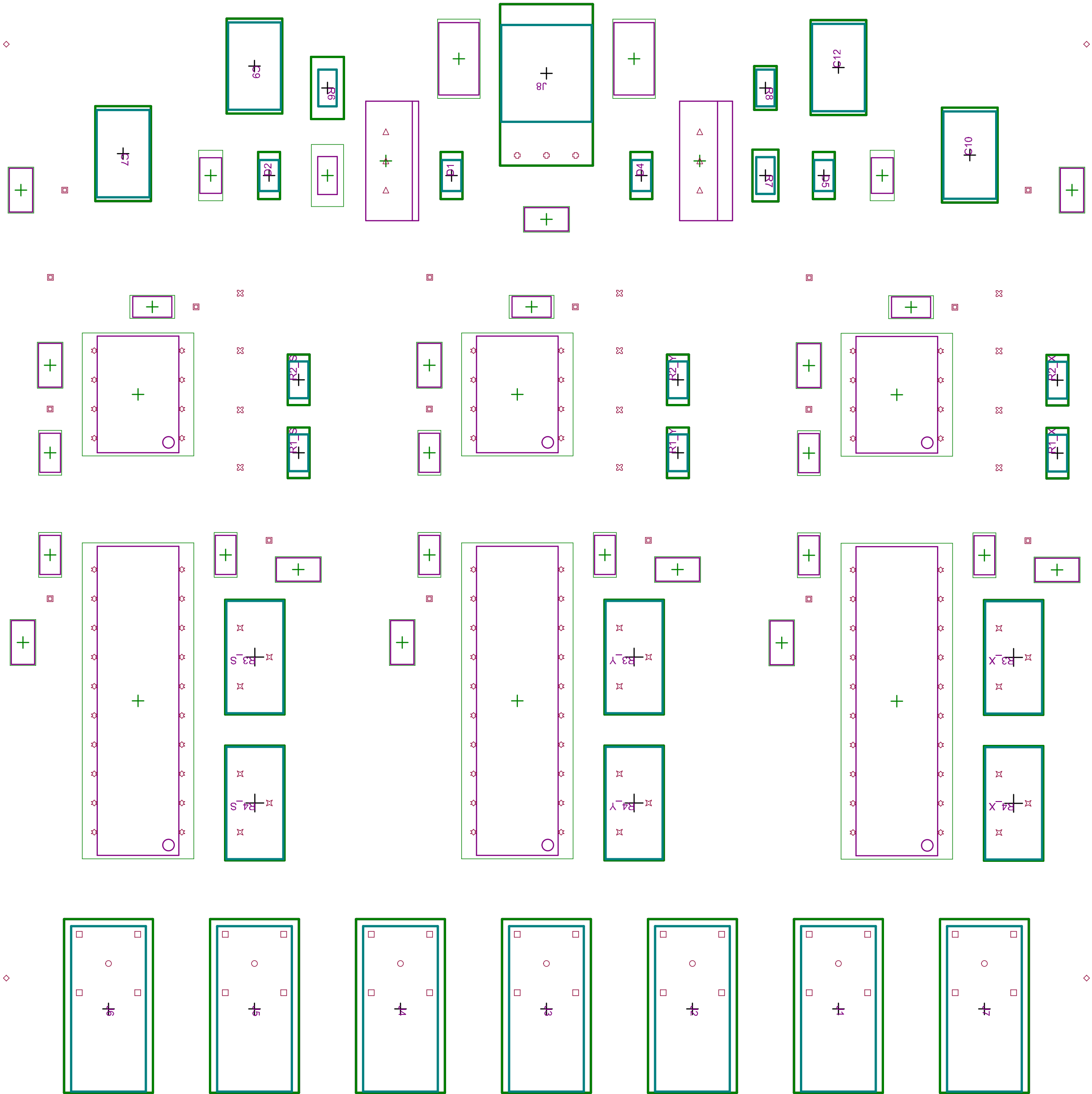

C9
R6
J8
C12
R8
C7
D2
D1
D4
R7
D5
C10
R2_S
R1_S
R2_Y
R1_Y
R2_X
R1_X
R3_S
R4_S
R3_Y
R4_Y
R3_X
R4_X

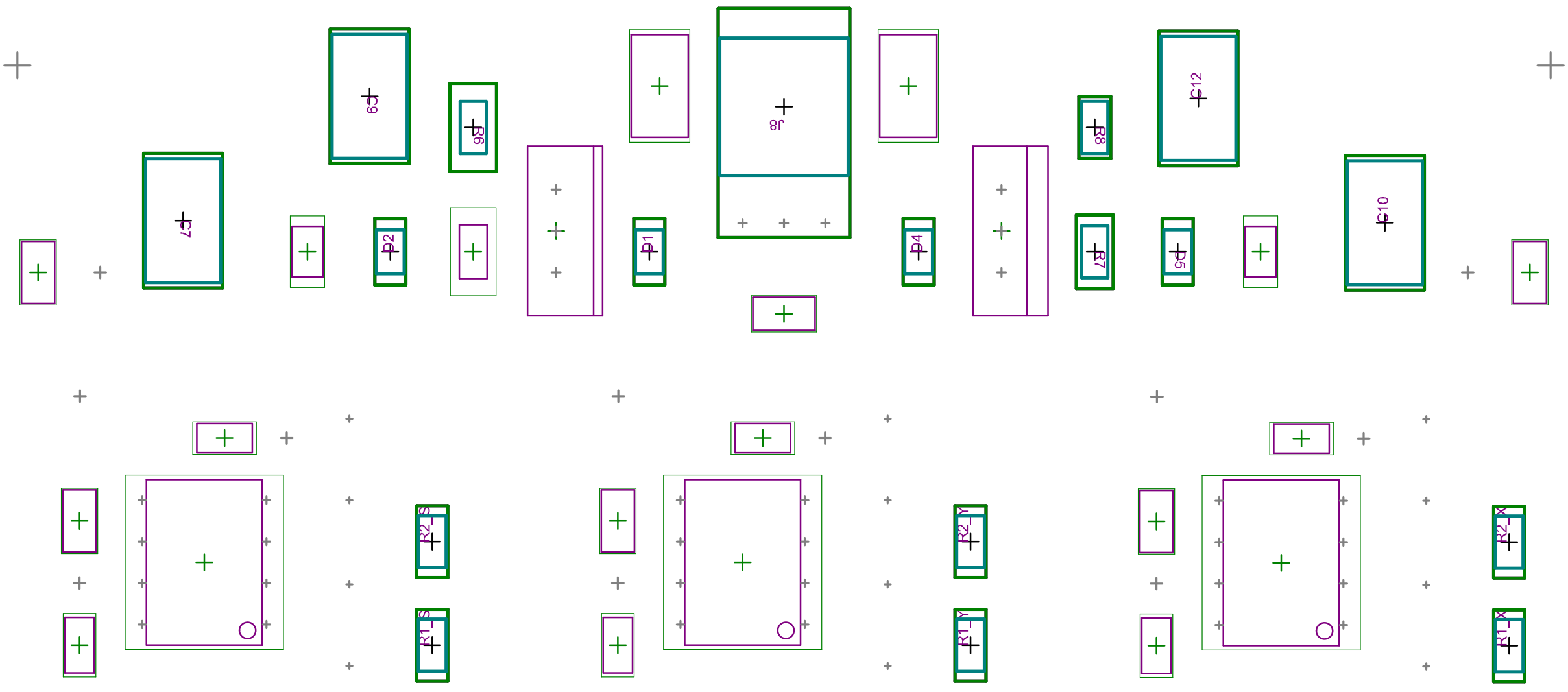
C9
R6
C7
R2
R1
J8
R4
R8
C12
R7
R5
C10
R2_S
R1_S
R2_Y
R1_Y
R2_X
R1_X
R3_S
R4_S
R3_Y
R4_Y
R3_X
R4_X
9
5
7
3
2
1
7